C A B L E A S S E M B L Y I N S T R U C T I O N

Controller Model: **Baldor SmartMove and NextMoveBX**

Maple OIT Model: **OIT3100 and OIT4100 Series**

Communication Type: **RS-422 with DE9 connector at controller**

Use the wiring diagram and illustration to assemble communication cables for use with Baldor SmartMove and NextMoveBX Motion Controllers.

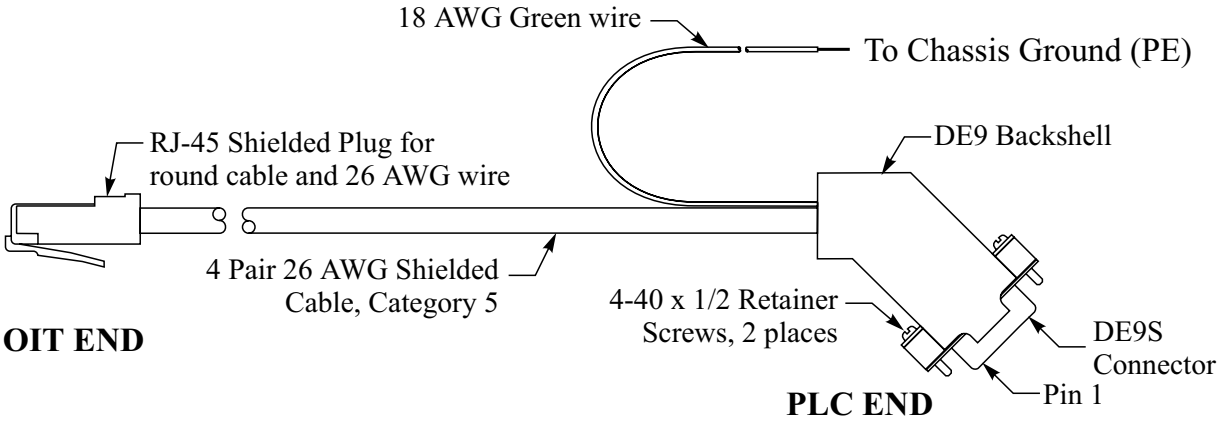

NOTES:

1. Twist together 18 AWG green wire and shield wire. Solder wires and insulate with heatshrink to avoid shorting.
2. Connect shield wire to the metal housing of the RJ-45 connector.

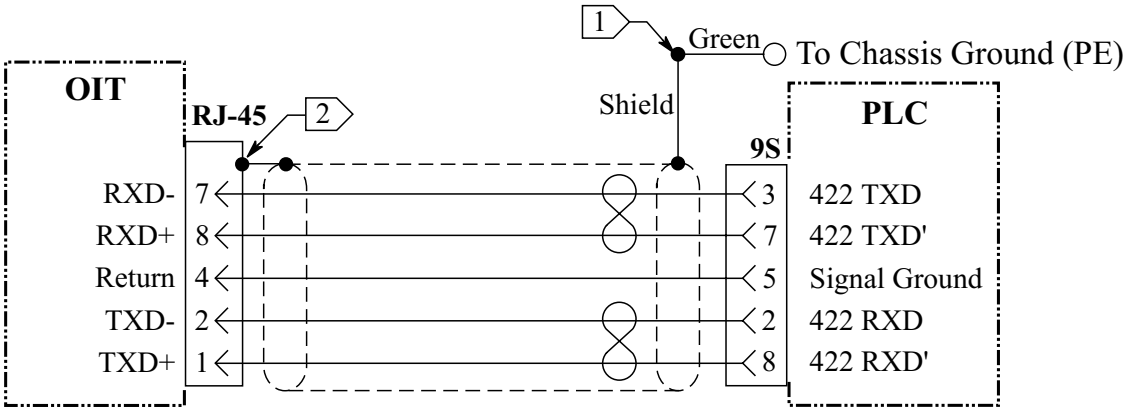

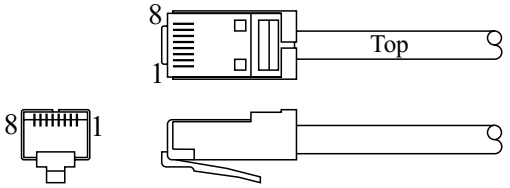

Pin Configuration
RJ-45 Plug