I/O Module Guide

For the MLC Series

Your Industrial Control Solutions Source

www.maplesystems.com

For use with the following:

- MLC Series
  Digital and Analog
  I/O Modules

Maple Systems, Inc. | 808 134th St. SW, Suite 120, Everett, WA 98204 | 425.745.3229

COPYRIGHT NOTICE

This manual is a publication of Maple Systems, Inc., and is provided for use by its customers only. The contents of the manual are copyrighted by Maple Systems, Inc.; reproduction in whole or in part, for use other than in support of Maple Systems equipment is prohibited without the specific written permission of Maple Systems.

WARRANTY

Warranty Statements are included with each unit at the time of purchase and are available at www.maplesystems.com.

TECHNICAL SUPPORT

This manual is designed to provide the necessary information for trouble-free installation and operation of your I/O module(s). However, if you need assistance, please contact Maple Systems:

- Phone: 425-745-3229
- Email: support@maplesystems.com
- Web: www.maplesystems.com

TABLE OF CONTENTS

Introduction....5
Common Terms for I/O Modules....8
Digital Modules....8
Analog Modules....9
Configuring I/O....12
Installing I/O Modules....13
Configuring Built-in I/O (MLC1 and MLC2 models)....14
Configuring MLE Expansion I/O Modules....18
Configuring High-Speed Counters....20
Configuring Pulse Width Modulation (PWM)....26
Configuration Tag Names....31
Configuring Analog Inputs/Outputs....32
FX-Series Non-Expandable CPU Base Units....35
MLC1-F0604N (CPU w/ 6 Digital Input, 5 Sinking Output)....35
MLC1-F0604P (CPU w/ 6 Digital Input, 5 Sourcing Output)....40
MLC1-F0808N (CPU w/ 8 Digital Input, 8 Sinking Output)....45
MLC1-F0808P (CPU w/ 8 Digital Input, 8 Sourcing Output)....50
MLC1-F0808Y (CPU w/ 8 Digital Input, 6 Relay & 2 Sourcing Output)....55
MLC1-F0808N0201 (CPU w/ 8 Digital Input, 8 Sinking Output, 2 Analog Input, 1 Analog Output)....60
MLC1-F0808P0201 (CPU w/ 8 Digital Input, 8 Sourcing Output, 2 Analog Input, 1 Analog Output)....67
MLC1-F0808Y0201 (CPU w/ 8 Digital Input, 6 Relay & 2 Sourcing Output, 2 Analog Input, 1 Analog Output)....74
MLC1-F1616P0201 (CPU w/ 16 Digital Input, 16 Sourcing Output, 2 Analog Input, 1 Analog Output)....81
EX-Series Expandable CPU Base Units....88
MLC1-E1616P (CPU w/ 16 Digital Input, 16 Sourcing Output)....88
MLC1-E1616Y (CPU w/ 16 Digital Input, 14 Relay & 2 Sourcing Output)....93
MLC1-E0808Y0402T (CPU w/ 8 Digital Input, 6 Relay & 2 Sourcing Output, 4 Analog Input, 2 Analog Output)....98
MLC1-E1616N0201 (CPU w/ 16 Digital Input, 16 Sinking Output, 2 Analog Input, 1 Analog Output)....107
MLC1-E1616P0201 (CPU w/ 16 Digital Input, 16 Sourcing Output, 2 Analog Input, 1 Analog Output)....115

MLC1-E1616Y0201 (CPU w/ 16 Digital Input, 14 Relay & 2 Sourcing Output, 2 Analog Input, 1 Analog Output) 123
MLC2-E0404P0802T (CPU w/ 4 Digital Input, 4 Sourcing Output, 8 Analog Input, 2 Analog Output).....131
MLC3-E (CPU w/ no Built-in I/O).....140
EX-Series I/O Expansion Modules.....141
MLE-D1600 (16 Digital Input Module).....141
MLE-D0016N (16 Sinking Output Module) 143
MLE-D0016P (16 Sourcing Output Module) 145
MLE-D0016R (16 Relay Output Module) 147
MLE-D0808N (8 Digital Input, 8 Sinking Output Module).....149
MLE-D0808P (8 Digital Input, 8 Sourcing Output Module).....151
MLE-D0808R (8 Digital Input, 8 Relay Output Module).....153
MLE-D0808NH (8 Digital Inputs-4 high-speed, 8 Sinking Output-2 PWM Module).....155
MLE-D0808PH (8 Digital Inputs-4 high-speed, 8 Sourcing Output-2 PWM Module).....159
MLE-A0800 (8 Analog Input Module) 163
MLE-A0004 (4 Analog Output Module) 166
MLE-A0402T (4 Analog Input, 2 Analog Output Module).....169

Introduction

The non-expandable FX-Series (fixed) CPU models have built in I/O. Non-expandable means that you cannot increase the number of I/O points on the unit by adding I/O expansion modules.

These units are CE and UL Certified. The FX-Series models are designed for applications in which a limited amount of I/O is required. They require little space and have a built-in processor with memory that can be used to run native ladder logic or IEC61131-3 programming.

MLC Part No.	Description
MLC1-F0604N	Base CPU module- non-expandable with 1 serial port, and 1 micro USB slave port. 6 Digital Inputs (4 high-speed) and 5 Digital Outputs (1 PWM, Sinking 0.5A). Digital Inputs support up to two High-Speed Counters (Up/Down/Quadrature 4X).
MLC1-F0604P	Base CPU module- non-expandable with 1 serial port, and 1 micro USB slave port. 6 Digital Inputs (4 high-speed) and 5 Digital Outputs (1 PWM, Sourcing 0.5A). Digital Inputs support up to two High-Speed Counters (Up/Down/Quadrature 4X).
MLC1-F0808N	Base CPU module- non-expandable with 2 serial ports, and 1 micro USB slave port. 8 Digital Inputs (4 high-speed) and 8 Digital Outputs (1 PWM, Sinking 0.5A). Digital Inputs support up to two High-Speed Counters (Up/Down/Quadrature 4X).
MLC1-F0808P	Base CPU module- non-expandable with 2 serial ports, and 1 micro USB slave port. 8 Digital Inputs (4 high-speed) and 8 Digital Outputs (2 PWM, Sourcing 0.5A). Digital Inputs support up to two High-Speed Counters (Up/Down/Quadrature 4X).
MLC1-F0808Y	Base CPU module- non-expandable with 2 serial ports, and 1 micro USB slave port. 8 Digital Inputs (4 high-speed) and 6 Relay Outputs, 2 Digital Outputs (2 PWM, Sourcing 0.5A). Digital Inputs support up to two High-Speed Counters (Up/Down/Quadrature 4X).
MLC1-F0808N0201	Base CPU module- non-expandable with 2 serial ports, and 1 micro USB slave port. 8 Digital Inputs (4 high-speed) and 8 Digital Outputs (2 PWM, Sinking 0.5A), 2 Analog Voltage/Current Inputs and 1 Analog Current Output. Digital Inputs support up to two High-Speed Counters (Up/Down/Quadrature 4X).
MLC1-F0808P0201	Base CPU module- non-expandable with 2 serial ports, and 1 micro USB slave port. 8 Digital Inputs (4 high-speed) and 8 Digital Outputs (2 PWM, Sourcing 0.5A), 2 Analog Voltage/Current Inputs and 1 Analog Current Output. Digital Inputs support up to two High-Speed Counters (Up/Down/Quadrature 4X).
MLC1-F0808Y0201	Base CPU module- non-expandable with 2 serial ports, and 1 micro USB slave port. 8 Digital Inputs (4 high-speed) and 6 Relay Outputs, 2 Digital Outputs (2 PWM, Sourcing 0.5A), 2 Analog Voltage/Current Inputs and 1 Analog Current Output. Digital Inputs support up to two High-Speed Counters (Up/Down/Quadrature 4X).
MLC1-F1616P0201	Base CPU module- non-expandable with 2 serial ports, and 1 micro USB slave port. 16 Digital Inputs (4 high-speed) and 16 Digital Outputs (2 PWM, Sourcing 0.5A) 2 Analog Voltage/Current Inputs and 1 Analog Voltage/Current Output. Digital Inputs support up to two High-Speed Counters (Up/Down/Quadrature 4X).

The EX-Series (expandable) CPU models have built in I/O points similar to the fixed FX-Series models, but if more I/O is needed, up to sixteen I/O expansion (MLE) modules can be added at any time. As with the models listed above, the EX-Series models have a built-in processor and memory that is capable of running native ladder logic or IEC61131-3 programming. These units are also CE and UL Certified.

MLC Part No.	Description
MLC1-E1616P	Base CPU module- expandable with 2 serial ports, and 1 micro USB slave port. 16 Digital Inputs (4 high-speed) and 16 Digital Outputs (2 PWM, Sourcing 0.5A). Digital Inputs support up to two High-Speed Counters (Up/Down/Quadrature 4X).
MLC1-E1616Y	Base CPU module- expandable with 2 serial ports, and 1 micro USB slave port. 16 Digital Inputs (4 high-speed) and 14 Relay Outputs, 2 Digital Outputs (2 PWM, Sourcing 0.5A). Digital Inputs support up to two High-Speed Counters (Up/Down/Quadrature 4X).
MLC1-E0808Y0402T	Base CPU module- expandable with 2 serial ports, and 1 micro USB slave port. 8 Digital Inputs (4 high-speed) and 6 Relay Outputs, 2 Digital Outputs (2 PWM, Sourcing 0.5A), 4 Analog Voltage/Current/RTD PT100/Thermocouple Inputs and 2 Analog Voltage/Current Outputs. Digital Inputs support up to two High-Speed Counters (Up/Down/Quadrature 4X).
MLC1-E1616N0201	Base CPU module- expandable with 2 serial ports, and 1 micro USB slave port. 16 Digital Inputs (4 high-speed) and 16 Digital Outputs (2 PWM, Sinking 0.5A), 2 Analog Voltage/Current Inputs and 1 Analog Voltage/Current Output. Digital Inputs support up to two High-Speed Counters (Up/Down/Quadrature 4X).
MLC1-E1616P0201	Base CPU module- expandable with 2 serial ports, and 1 micro USB slave port. 16 Digital Inputs (4 high-speed) and 16 Digital Outputs (2 PWM, Sourcing 0.5A), 2 Analog Voltage/Current Inputs and 1 Analog Voltage/Current Output. Digital Inputs support up to two High-Speed Counters (Up/Down/Quadrature 4X).
MLC1-E1616Y0201	Base CPU module- expandable with 2 serial ports, and 1 micro USB slave port. 16 Digital Inputs (4 high-speed) and 14 Relay Outputs, 2 Digital Outputs (2 PWM, Sourcing 0.5A), 2 Analog Voltage/Current Inputs and 1 Analog Voltage/Current Output. Digital Inputs support up to two High-Speed Counters (Up/Down/Quadrature 4X).
MLC2-E0404P0802T	Base CPU module- expandable with 1 Ethernet port, 2 serial ports, 1 micro USB slave port, and 1 micro SD slot. 4 Digital Inputs (4 high-speed) and 4 Digital Outputs (2 PWM, Sourcing 0.5A), 4 Analog Voltage/Current/RTD PT100/Thermocouple Inputs, 4 additional Analog Current Inputs and 2 Analog Voltage/Current Outputs. Digital Inputs support up to two High-Speed Counters (Up/Down/Quadrature 4X).
MLC3-E	Base CPU module- expandable with 1 Ethernet port, 2 serial ports, 1 mini USB slave port, and 1 USB host port. This module has over 50 MB total memory and supports web screen functionality. This model has no built-in I/O.

The EX-Series MLE expansion I/O modules can be added to any of the EX-Series CPU models listed above. These modules provide digital and/or analog I/O (inputs and outputs) for an electrical control system. All of the I/O Modules are CE and UL Certified. The following I/O Modules are available:

I/O Module Part No.	Description
MLE-D1600	16 Bidirectional Digital Inputs (Sinking or Sourcing)
MLE-D0016N	16 Digital Outputs (Sinking 0.5A).
MLE-D0016P	16 Digital Outputs (Sourcing 0.5A).
MLE-D0016R	16 Relay Outputs (Form A, 230VAC, 30VDC).
MLE-D0808N	8 Bidirectional Digital Inputs, 8 Digital Outputs (Sinking 0.5A).
MLE-D0808P	8 Bidirectional Digital Inputs, 8 Digital Outputs (Sourcing 0.5A).
MLE-D0808R	8 Bidirectional Digital Inputs, 8 Relay Outputs (Form A, 230VAC, 30VDC).
MLE-D0808NH	8 Bidirectional Digital Inputs (4 high-speed), 8 Digital Outputs (2 PWM, Sinking 0.5A). Digital Inputs support up to four High-Speed Counters (Up/Quadrature 1X, 4X).
MLE-D0808PH	8 Bidirectional Digital Inputs (4 high-speed), 8 Digital Outputs (2 PWM, Sourcing 0.5A). Digital Inputs support up to four High-Speed Counters (Up/Quadrature 1X, 4X).
MLE-A0800	8 Analog Inputs (0-10V, 4-20mA).
MLE-A0004	4 Analog Outputs (0-10V, 4-20mA).
MLE-A0402T	4 Analog Inputs (0-10V, 1-5V, 0-20mA, 4-20mA, RTD PT100, or Thermocouple), and 2 Analog Outputs (0-10V, 4-20mA).

Common Terms for I/O Modules

This section defines some common terms used to describe various types of input and output modules. The terms explained below are generic descriptions. Be sure to consult the datasheet for the specific requirements when installing and wiring a module.

Digital Modules

Digital Modules provide physical connections and interpretations of input devices using discrete signals. The input is represented in the PLC input registers as a 1 for the on state and 0 for the off state. Each digital input terminal is associated with an internal Input Coil (X) in the tag database of the MLC PLC. Similarly, each digital output terminal is associated with an Output Coil (Y).

Sinking versus Sourcing Inputs

These terms refer to the type of digital inputs or outputs used. A sourcing I/O provides a voltage source, and a sinking I/O provides a ground. Any module that is not bidirectional (meaning current can go in either direction) requires that the circuit conduct current in a specific direction.

For a sourcing module, the current flows out of the expansion module terminal and into the common (signal ground) terminal. The term source indicates the terminal on the expansion module provides the current to the switch contact or load.

For a sinking module, the current flows into the expansion module terminal and out of the common terminal on the I/O module. The term sink indicates the terminal takes in the current from the switch contact or load.

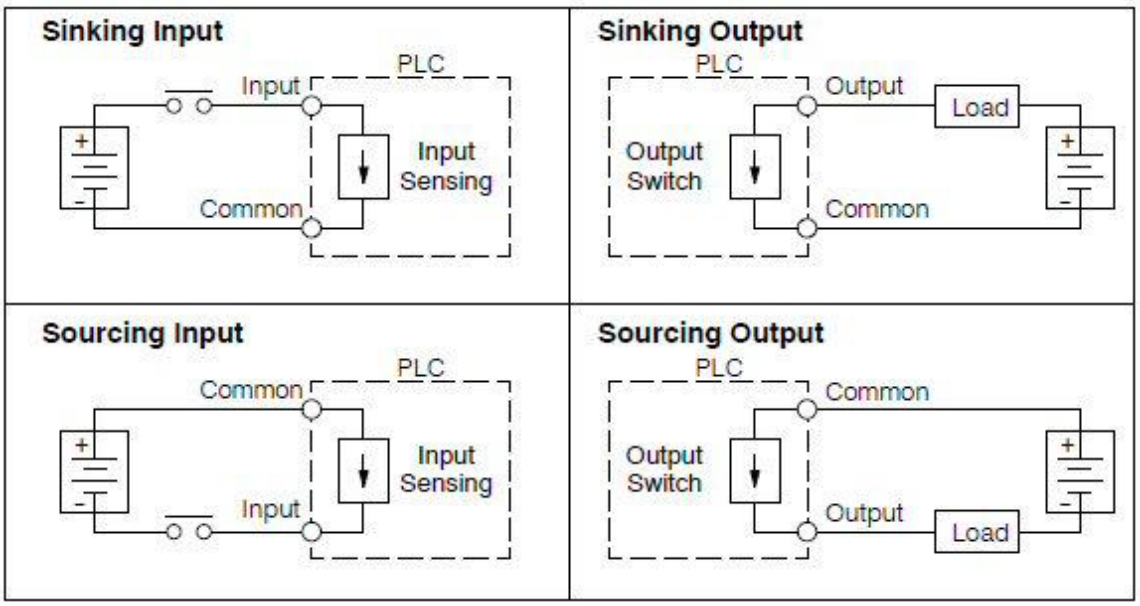

Note: Arrow indicates current flow direction

In order to have current flow, each I/O terminal on the expansion module must have a return path or a signal ground connection. In most modules, multiple I/O terminals share the signal ground connection.

Digital Outputs (PNP or NPN type)

The output terminals of a digital I/O module use an optically isolated PNP or NPN transistor to energize the connected load. PNP/NPN outputs are faster than relay outputs but can only work with low current DC loads (typically 500mA max per terminal). PNP modules are sourcing modules, and NPN modules are sinking modules.

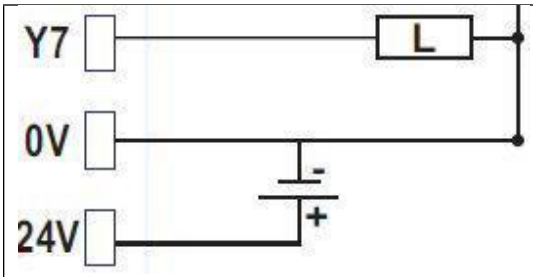	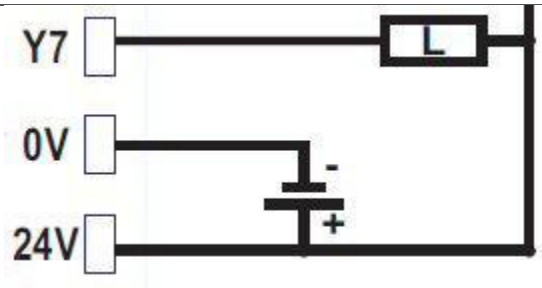
PNP-type connection (Source)	NPN-type connection (Sink)

Note: The above diagrams show that a PNP output is 'sourcing' current and the NPN output is 'sinking' current.

Digital Outputs (Relay type)

The output terminals of a relay-type digital module typically control loads that require an AC power source:

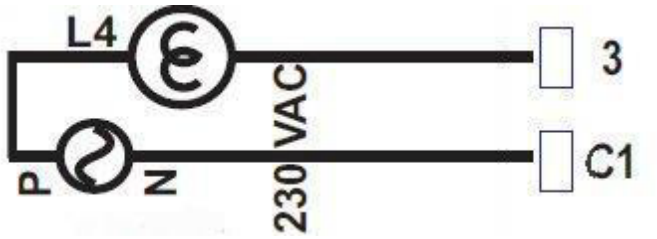

Use a Relay Output module to connect a DC load that requires more current than the maximum available when using a PNP or NPN output. For AC loads, each relay output contact can handle up to 230VAC with a 2A load per contact. For DC loads, each relay output contact can handle a 2A load per contact for up to 30VDC.

Analog Modules

Analog Modules provide physical connections and interpretations of input devices using analog signals. The input range depends on the type of input device. Configure analog inputs to work with current or voltage sources. Some of the analog input modules also provide support to connect to resistance temperature detectors (RTDs) PT100 sensors and thermocouple sensors. Each analog input terminal is associated with an internal Input Register (XW) in the tag database of the MLC PLC. Similarly, each analog output terminal is associated with an Output Register (YW).

Analog Voltage

Available analog input DC voltage ranges include:

- 0 to 10 volts
- 0 to 5 volts
- 1 to 5 volts
- 0 to 100 millivolts
- 0 to 50 millivolts

With analog inputs, the analog module writes a data value to the assigned register (XW) based upon the measured DC voltage at the input.

Analog outputs can provide 0 to 10 VDC to a minimum load resistance of 1000 ohms depending upon the value in the assigned register (YW).

Analog Current

Available analog input current ranges include:

- 0 to 20 milliamps
- 4 to 20 milliamps

With analog inputs, the analog module writes a data value to the assigned register (XW) based upon the measured DC current at the input.

The analog outputs can provide 4 to 20mA DC current to a load with a maximum resistance of 500 ohms based upon the data value in the assigned register (YW).

Analog RTD PT100

Some analog input modules can connect to RTD PT100 sensors to measure temperature. Two modes are supported:

Mode	Temperature Range	Conversion Rate	Example
Alpha1	-200 to +850°C	0.02°C/bit	-200°C = 0 +525°C = 32768 +850°C = 65535
Alpha2	-100 to +457°C	0.01°C/bit	-100°C = 0 +179°C = 32768 +457°C = 65535

Models that support RTD PT100 sensors:

- MLC1-E0808Y0402T
- MLC2-E0404P0802T
- MLE-A0402T

Analog Thermocouple

Some analog input modules can connect to Thermocouple sensors to measure temperature. Modes supported:

Mode	Temperature Range	Conversion Rate
J (Iron/Constantan)	-210 to +1200°C	0.035°C/bit
K (Chromel/Alumel)	-200 to +1373°C	0.049°C/bit
E (Chromel/Constantan)	-200 to +1000°C	0.027°C/bit
R (Platinum/Rhodium)	-50 to +1769°C	0.16°C/bit
S (Platinum/Rhodium)	-50 to +1769°C	0.18°C/bit
B (Platinum/Rhodium)	0 to +1820°C	0.25°C/bit
N (Nicrosil/Nisil)	-200 to +1300°C	0.056°C/bit
T (Copper/Constantan)	-200 to +400°C	0.043°C/bit

Models that support thermocouple sensors:

- MLC1-E0808Y0402T (Types J, K)
- MLC2-E0404P0802T (Types J, K)
- MLE-A0402T (all types)

Configuring I/O

Each I/O terminal is labeled for easy identification on the modules. As mentioned above, ‘COM’ is the common ground terminal. A terminal with an ‘X’ followed by a number is an input terminal and a terminal with a ‘Y’ followed by a number is an output terminal. The number refers to the position associated with each terminal on the I/O module.

Labels for the analog inputs and outputs vary according to the module and what is supported (i.e. voltage, current, RTD, or thermocouple).

Analog inputs can be designated as V1-2 (voltage), I1-2 (current), CS11-41 (voltage, RTD, thermocouple), or IN1-4+, I1-4-, AIN1-7 (for current).

Analog outputs can be designated as IOUT, I0, or IO1-2 (current) or V0 or VO1-2 (voltage).

When a project is created in MAPware-7000, bit/register memory addresses are assigned for each terminal on the expansion module. MAPware-7000 provides the option to allow the software to do this automatically. In this case, it will assign memory addresses according to the position and expansion slot in which the I/O module is located.

In addition, many of the I/O modules have a two-pin connector that is used to connect a voltage source (usually +24VDC). This voltage source drives the output terminals of the I/O modules.

Installing I/O Modules

The MLE I/O expansion modules for the MLC-E PLC models connect to the base CPU and each other via an I/O expansion port that is located on the side of each module:

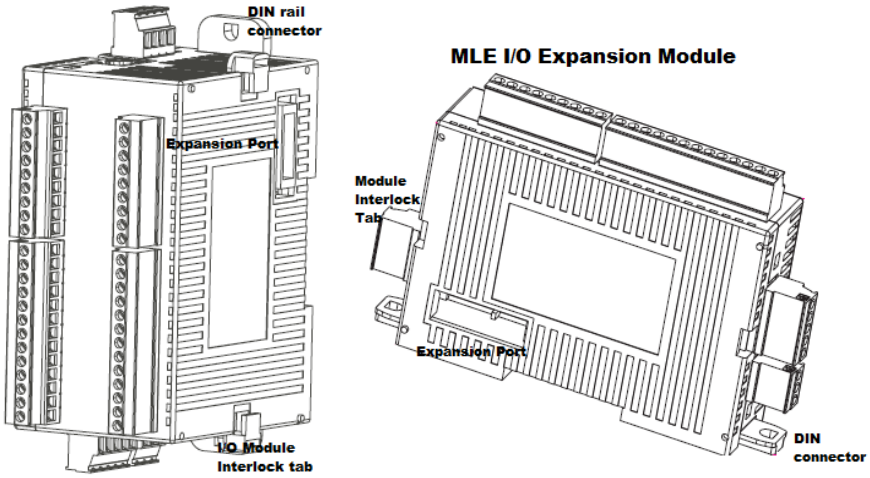

To connect an MLE I/O module to a MLC1-E, MLC2, or MLC3 CPU base, perform the following steps:

- On the CPU base, remove the expansion port sticker to expose the I/O connector slot.
- Slide out the I/O module interlock tabs on the CPU base.
- Carefully attach the I/O module to the CPU base module so that the I/O expansion connector on the I/O module ‘snaps’ into the I/O connector slot of the CPU.
- Push the two I/O module interlock tabs on the CPU base back in to lock the I/O expansion module to the CPU base.

Once installed, the PLC can then be mounted into a panel using either a 35mm DIN rail or by installing screws (not included with PLC) into the white DIN rail slots attached to each CPU/IO module.

Configuring Built-in I/O (MLC1 and MLC2 models)

The built-in I/O for the MLC PLC Series is automatically assigned to tags in your MAPware-7000 project when you initially start a project:

1. Open a new project and select the appropriate MLC PLC model and programming language. Click **OK**.

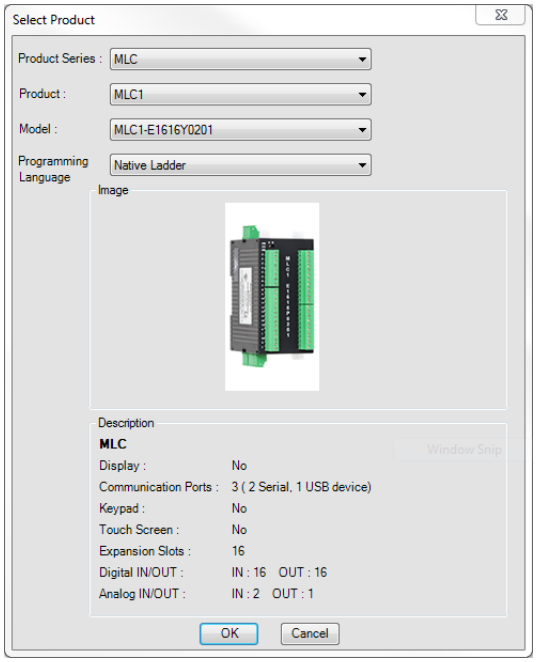

2. Under the **Project Information Window**, click on the **Tags** folder:

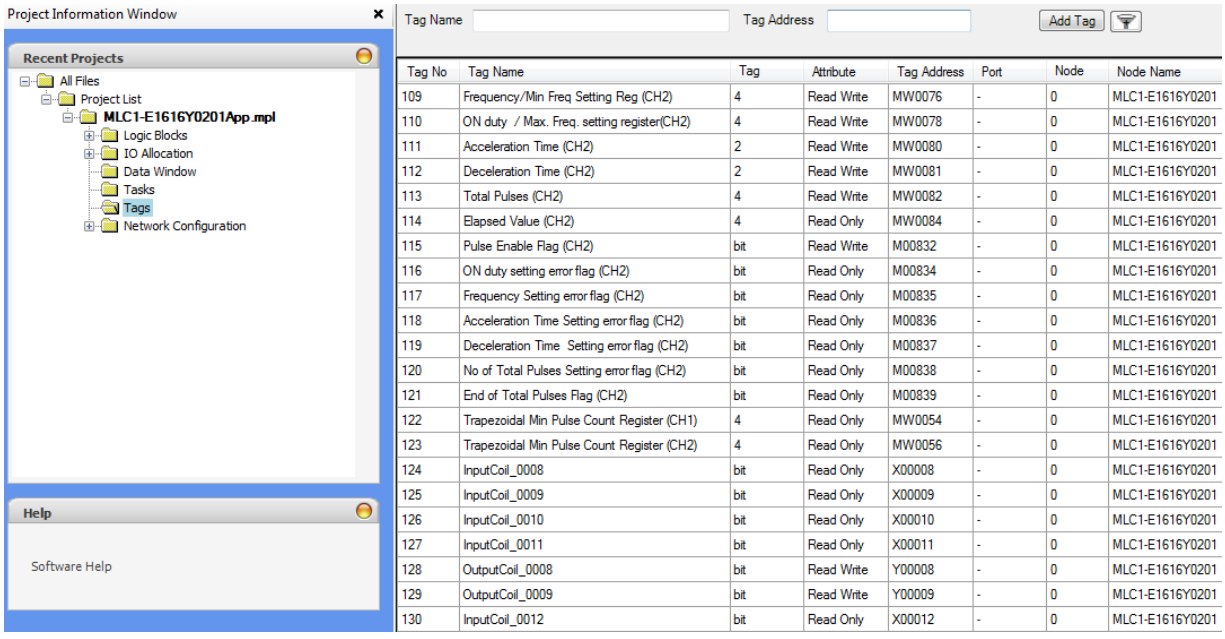

Tag No	Tag Name	Tag	Attribute	Tag Address	Port	Node	Node Name
109	Frequency/Min Freq Setting Reg (CH2)	4	Read Write	MW0076	-	0	MLC1-E1616Y0201
110	ON duty / Max. Freq. setting register(CH2)	4	Read Write	MW0078	-	0	MLC1-E1616Y0201
111	Acceleration Time (CH2)	2	Read Write	MW0080	-	0	MLC1-E1616Y0201
112	Deceleration Time (CH2)	2	Read Write	MW0081	-	0	MLC1-E1616Y0201
113	Total Pulses (CH2)	4	Read Write	MW0082	-	0	MLC1-E1616Y0201
114	Elapsed Value (CH2)	4	Read Only	MW0084	-	0	MLC1-E1616Y0201
115	Pulse Enable Flag (CH2)	bit	Read Write	M00832	-	0	MLC1-E1616Y0201
116	ON duty setting error flag (CH2)	bit	Read Only	M00834	-	0	MLC1-E1616Y0201
117	Frequency Setting error flag (CH2)	bit	Read Only	M00835	-	0	MLC1-E1616Y0201
118	Acceleration Time Setting error flag (CH2)	bit	Read Only	M00836	-	0	MLC1-E1616Y0201
119	Deceleration Time Setting error flag (CH2)	bit	Read Only	M00837	-	0	MLC1-E1616Y0201
120	No of Total Pulses Setting error flag (CH2)	bit	Read Only	M00838	-	0	MLC1-E1616Y0201
121	End of Total Pulses Flag (CH2)	bit	Read Only	M00839	-	0	MLC1-E1616Y0201
122	Trapezoidal Min Pulse Count Register (CH1)	4	Read Only	MW0054	-	0	MLC1-E1616Y0201
123	Trapezoidal Min Pulse Count Register (CH2)	4	Read Only	MW0056	-	0	MLC1-E1616Y0201
124	InputCoil_0008	bit	Read Only	X00008	-	0	MLC1-E1616Y0201
125	InputCoil_0009	bit	Read Only	X00009	-	0	MLC1-E1616Y0201
126	InputCoil_0010	bit	Read Only	X00010	-	0	MLC1-E1616Y0201
127	InputCoil_0011	bit	Read Only	X00011	-	0	MLC1-E1616Y0201
128	OutputCoil_0008	bit	Read Write	Y00008	-	0	MLC1-E1616Y0201
129	OutputCoil_0009	bit	Read Write	Y00009	-	0	MLC1-E1616Y0201
130	InputCoil_0012	bit	Read Only	X00012	-	0	MLC1-E1616Y0201

Note that the **Tags** folder contains several predefined tags (i.e. InputCoil_0008 [X00008]) that are associated with the physical I/O of the CPU base module. Use these tags in your ladder logic when you need to read/write to I/O.

Some CPU modules offer additional features for the built-in I/O. For example, you can configure digital inputs as high-speed counters (HSC). Some digital outputs can be configured for PWM (Pulse Width Modulation) mode. Other CPU base modules have built-in analog inputs and outputs which must be configured before they can be used. To use these features, you must configure the built-in I/O in your MAPware-7000 project:

3. Using the example above, click on the **IO Allocation** folder under the **Project Information Window** to expand the folder:

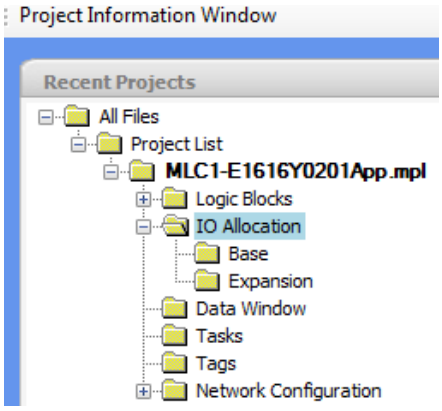

4. Click on the **Base** folder to display the name of the CPU base module in the work area of MAPware-7000.

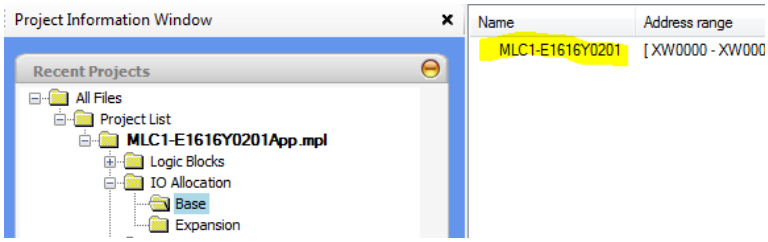

5. Double-click on the name to display the **IO Allocation** popup window:

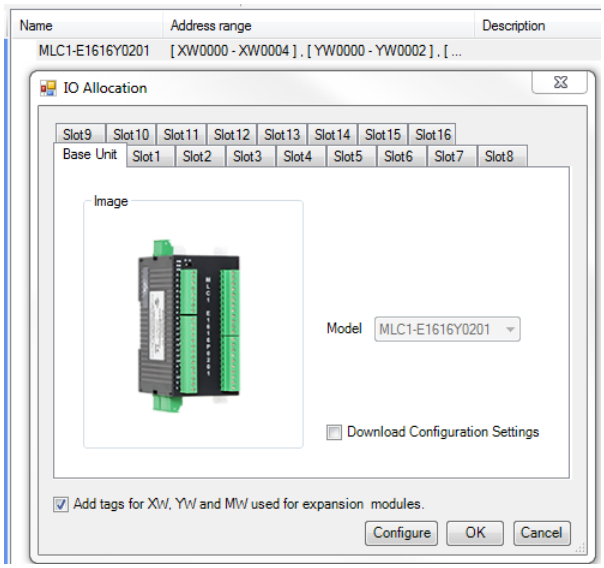

6. As you can see, the “Add tags for XW, YW, ….” option is already checked. This option adds predefined tags to the Tag database for the I/O- it should always be checked. Another option “Download Configuration Settings” is used to download any options you have configured for the I/O to the CPU module when you download your project. This should be checked whenever you make any changes to the operating mode of the I/O. For now, click on the **Configure** button.

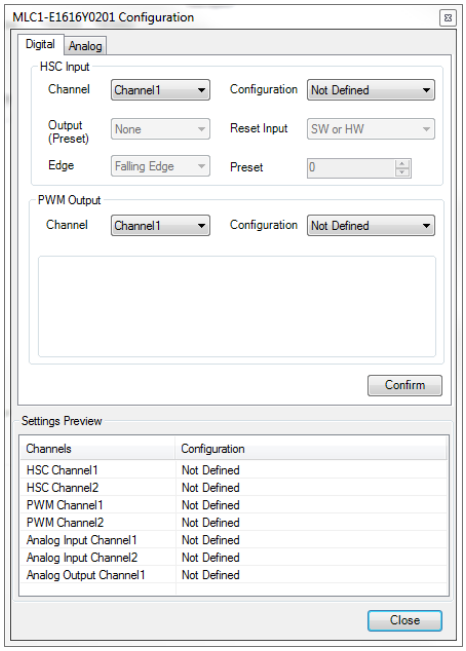

7. The CPU Base Configuration window is used to configure the I/O that is built-in to the CPU. One tab is used to configure the digital I/O and the other for analog I/O. After configuring each channel, you must click on the **Confirm** button to register any changes. The **Digital** tab has two sections. **HSC Input** is used to configure High-Speed Counters for the digital inputs. **PWM Output** is used to configure PWM mode for the digital outputs.

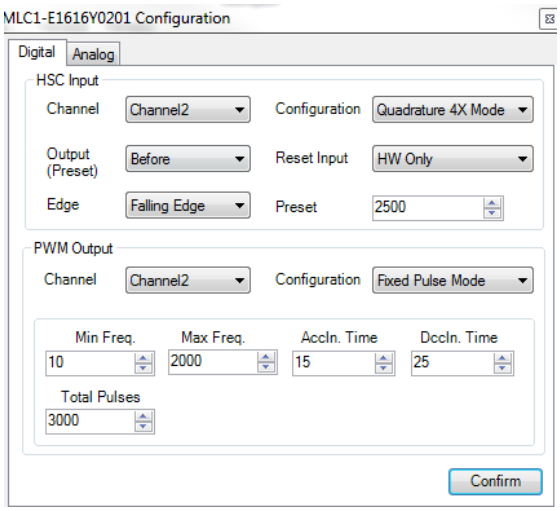

8. The **Analog** tab is used to configure each analog input/output channel. After configuring each channel, you must click on the **Confirm** button to register any changes.

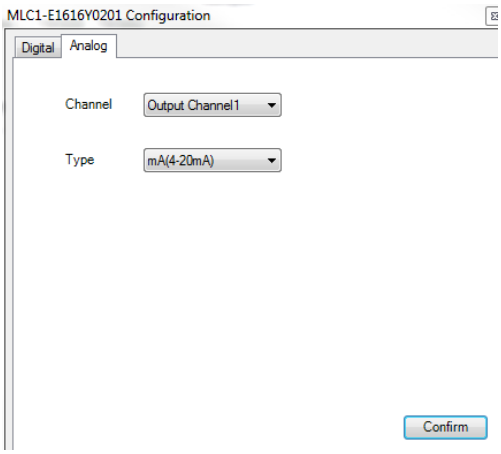

9. When done, click the **Close** button and make sure you check the “Download Configuration Settings” option. Then click **OK**.

When you download your project, your settings will be written to specific M and MW configuration tag registers. The MLC unit reads these registers during startup to determine how the I/O is to operate. For a list of the specific M and MW registers used, continue reading or consult the MAPware-7000 help files.

Configuring MLE Expansion I/O Modules

Similar to above, if you are adding any MLE I/O Expansion modules to an EX-Series PLC, you must assign the proper slot using MAPware-7000. Note that any project downloaded into a MLC PLC with modules that do not match the physical configuration of the unit will not run. Therefore, it is important to correctly identify the I/O modules in the MAPware-7000 project.

Regardless of the particular MLC PLC model used, the steps to configure the I/O modules are very similar:

1. Open a new project and select the appropriate MLC PLC model. Click **OK**.

2. In the **Project Information Window**, click on the **IO Allocation** folder, and then click on the **Expansion** folder.

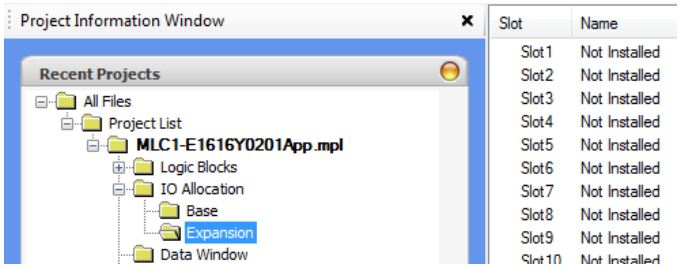

3. Double-click on **Slot 1** to display the **IO Allocation** dialog:

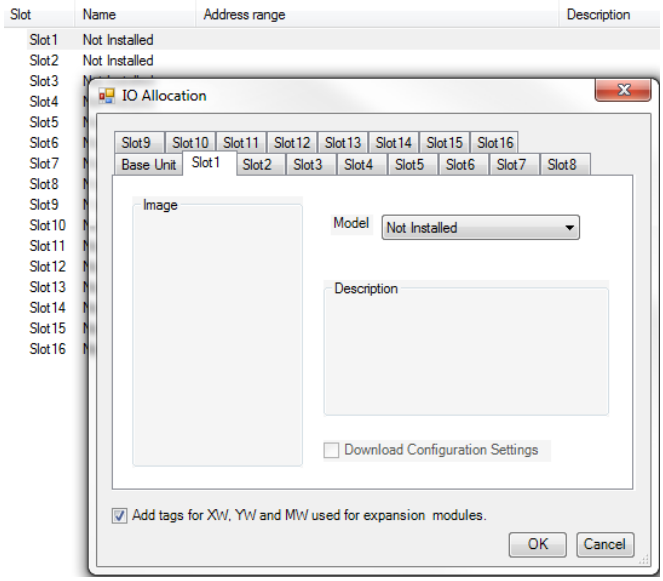

4. Select from the list box, the particular I/O expansion module installed in Slot 1 of the MLC PLC. When the checkbox to 'Add tags for XW, YW, and MW' is checked, MAPware-7000 automatically assigns tags to the Tag Database for the I/O module. As with the built-in I/O of the CPU base module, some I/O expansion modules can be configured for HSCs, PWMs, or the operating mode for analog inputs/outputs. Click the **Configure** button (if not present, options are not available for selected I/O

module) to display the I/O module Configuration window and configure the module.

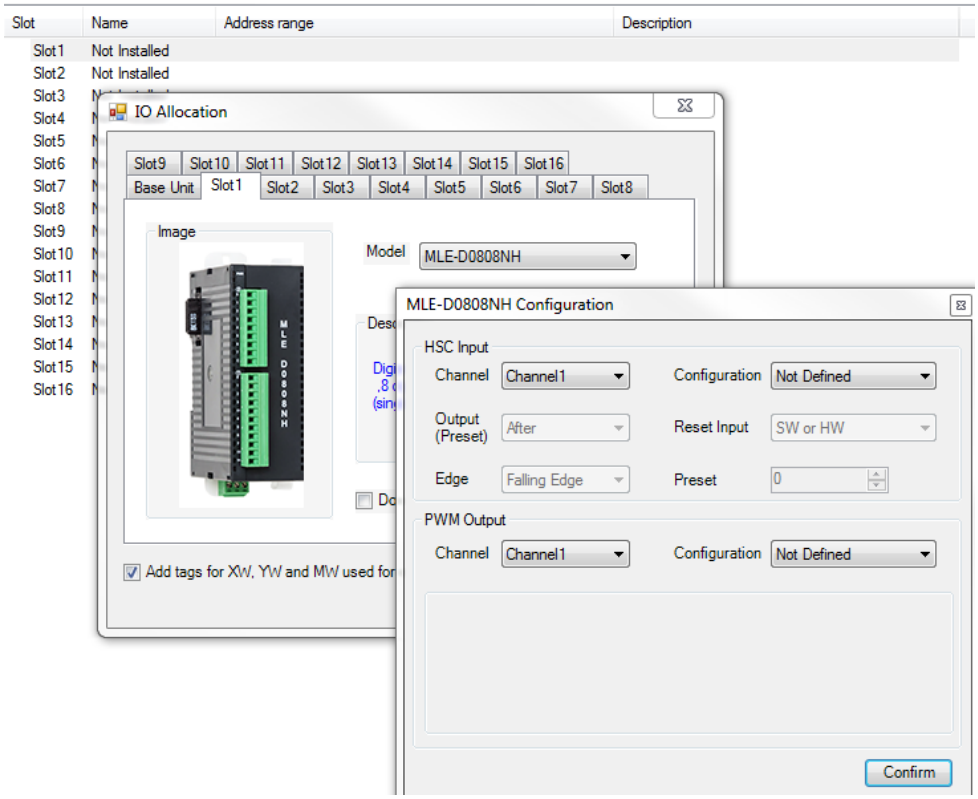

5. When done, click **OK** to record the configuration and to add the tags to the Tag Database.

Configuring High-Speed Counters

Many Maple Systems MLC products have built-in High-Speed Counters (HSCs) that link directly to specific inputs and outputs. Specific registers and bits are predefined for setup and control of these counters. No logic is required to run the counters, other than logic that may be used to configure and control the counters. Each HSC option on a given module is referred to as a 'channel', with a set of physical inputs/outputs and predefined tags. The number of channels supported depends upon the particular MLC product.

Several modes of HSC operation are available:

- Single Phase Up Counter- This mode is used to count the number of incoming pulses to a digital input (X). The pulse count is increased by 1 each time a new pulse is received on the input. The accumulated count is compared to a preset value- when the values match, a predefined configuration bit (M) is set. There is also an option to set a physical output (Y). Once the accumulated value reaches the preset value, a configuration bit (M) or physical input (X) can be used to reset the accumulated value back to 0. A configuration bit (M) is used to enable or disable the counter.

- Single Phase Down Counter- This mode is similar to the Up-Counter described above, except that the accumulated value starts at 4,294,967,295 and counts down to the preset value. For models that support both Phase Up and Phase Down counting, direction is controlled by a second digital input (X).When the input is high, the counter will count up. When it is low, the counter will count down.

- Quadrature 1X Mode- Quadrature encoders are used to measure the speed and direction (clockwise or counter-clockwise) of a device. Each encoder has two tracks, A and B (thus two inputs are required), that are 90° out of phase, which enable it to provide accurate position information. It will count up when phase A precedes, and count down when phase B precedes. The length of travel can be determined by the speed of the incoming pulses. With 1X mode, the current value increments or decrements at the rising or falling edge of the phase B input after the phase A input has turned on.

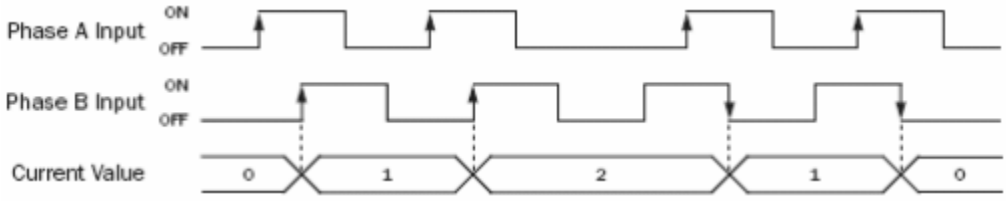

- Quadrature 2X Mode- Same as 1X mode, except that the current value increments or decrements at the rising or falling edge of the phase B input after the phase A input has turned on or off.

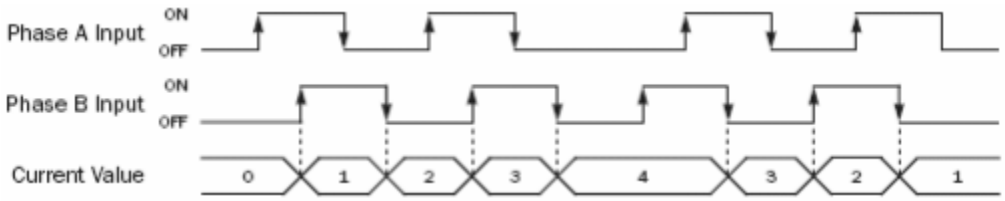

- Quadrature 4X Mode- Same as 1X/2X mode, except that the current value increments or decrements at the rising or falling edges of the phase A and B inputs. Both rising and falling edges of each phase are

counted. This essentially quadruples the number of pulses per revolution, by counting 4 times the pulse frequency.

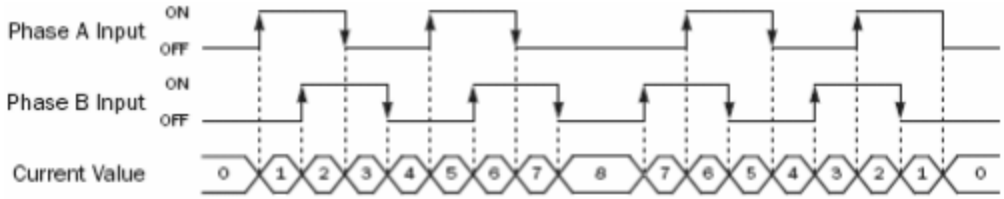

Note: Not all MLC models support Single Phase Down-Counter or the Quadrature 1X/2X modes of operation. Consult the specifications for the particular model that you are using.

The following bits and registers are associated with a High-Speed counter:

Registers	**Description**
Configuration Register	The 16-bit register that controls how the HSC operates.
Current Count Register	The 32-bit register that counts the number of times that the Trigger has transitioned. The specified register is the Least Significant Word (LSW); the next consecutive register is the Most Significant Word (MSW).
Preset Register	The 32-bit register that defines the number of counts at which the Done bit will be set (see description of Done Bit below). The specified register is the Least Significant Word (LSW); the next consecutive register is the Most Significant Word (MSW).
Bits	**Description**
Trigger Bit	The physical input bit that triggers the count. The HSC will increment by one on each bit transition. The HSC can operate on a falling (default) or rising edge.
Up/Down Input	The physical input that determines whether the HSC counts up or down. Only applicable to models that support single-phase down counters. This bit can be toggled during operation to change counter direction.
Enable Bit	The counter will not run unless this bit is set (true). If this bit is reset (goes to false) while the counter is running, the current values will be maintained, but the Trigger bit will have no effect.
Reset Bit	When this bit goes from false to true, the current count will reset to 0 and the Done bit is reset. The reset is accomplished by an internal bit or a physical input.
Done Bit	Physical output or internal preset reached bit that turns on when the Current Count is equal to or greater than the Preset value. The bit remains set until the Reset bit goes true.

The registers and I/O associated with the High-Speed Counter depend on the hardware.

CPU Base Units with Built-in I/O (MLC1-F, MLC1-E, and MLC2-E models)

MLC1-F, MLC1-E, and MLC2-E base models support Single Phase Up, Single Phase Down, and Quadrature 4X modes at speeds of up to 200kHz.

Function	Channel 1	Channel 2	IEC Data Type
Trigger Input or Encoder A	X0	X2	BOOL
Up/Down Input or Encoder B	X1	X3	BOOL
HW Reset Input	X4	X5	BOOL
Reset Bit (Internal)	M241	M721	BOOL
HW Done Output	Y2	Y3	BOOL
Preset Reached (Internal Done Bit)	M242	M722	BOOL
Enable Bit	M240	M720	BOOL
Configuration Register	MW10	MW40	WORD
Current Count Register (LSW, MSW)	MW11, MW12	MW41, MW42	DWORD
Preset Register (LSW, MSW)	MW13, MW14	MW43, MW44	DWORD

These tags are assigned automatically when a project is created:

Tag No	Tag Name	Tag	Attribute	Tag Address	Port	Node	Node
52	HSC Enable Bit (CH1)	bit	Read Write	M00240	-	0	MLC1-E
53	HSC Reset Bit(CH1)	bit	Read Write	M00241	-	0	MLC1-E
85	HSC Preset Reached Bit (CH1)	bit	Read Only	M00242	-	0	MLC1-E
37	System timer coil for 0.1 sec interval	bit	Read Only	M00480	-	0	MLC1-E
47	Always OFF	bit	Read Only	M00513	-	0	MLC1-E
89	HSC Enable Bit (CH3)	bit	Read Write	M00720	-	0	MLC1-E
90	HSC Reset Bit(CH3)	bit	Read Write	M00721	-	0	MLC1-E
91	HSC Preset Reached Bit (CH3)	bit	Read Only	M00722	-	0	MLC1-E
95	Pulse Enable Flag (CH1)	bit	Read Write	M00816	-	0	MLC1-E
27	Variable input filter constant (0 to 15 mS)	2	Read Write	MW0005	-	0	MLC1-E
49	HSC Configuration register(CH1)	2	Read Write	MW0010	-	0	MLC1-E
50	High Speed Counter (HSC) Register (CH1)	4	Read Only	MW0011	-	0	MLC1-E
51	HSC Preset Register (CH1)	4	Read Write	MW0013	-	0	MLC1-E
55	System Timer Coils	2	Read Only	MW0030	-	0	MLC1-E
86	HSC Configuration register(CH3)	2	Read Write	MW0040	-	0	MLC1-E
87	High Speed Counter (HSC) Register (CH3)	4	Read Only	MW0041	-	0	MLC1-E
88	HSC Preset Register (CH3)	4	Read Write	MW0043	-	0	MLC1-E
122	Trapezoidal Min Pulse Count Register (CH1)	4	Read Only	MW0054	-	0	MLC1-E

Configuration Register

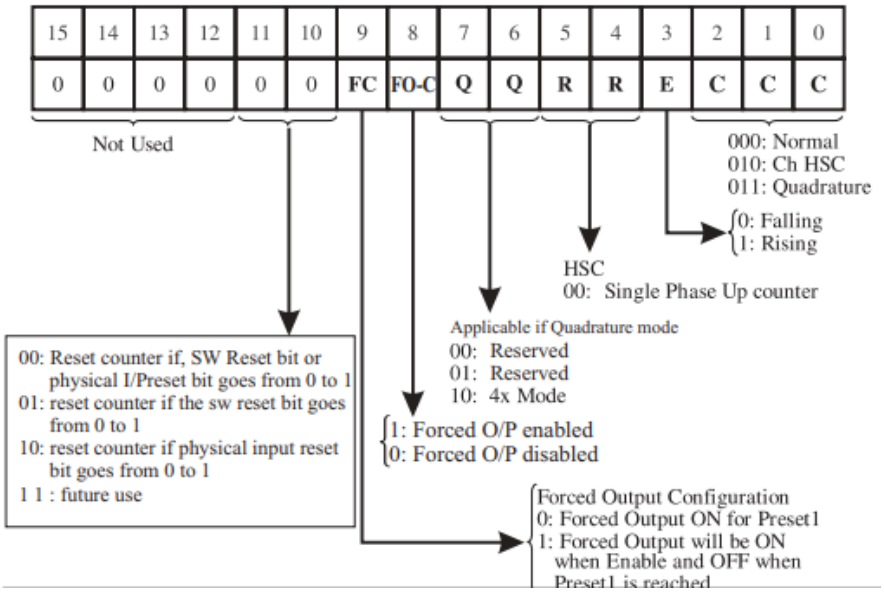

Reference the table below when configuring each HSC Configuration Register (MW0010 or MW0040):

Input Mode	Output Mode	Register Value
Normal Input (HSC not enabled)	N/A	0
High-Speed Single Phase Counter, Up or Down based on Up/Down input	HW Done Bit Disabled	2
	HW Done output ON when preset is reached	258
	Done output ON when counter is enabled, OFF when preset is reached	770
Quadrature 4X	HW Done Bit Disabled	131
	HW Done output ON when preset is reached	387
	Done output ON when counter is enabled, OFF when preset is reached	899

High-Speed Counter Operation

To implement High-Speed Counter Operation (using a MLC CPU base module as example):

1. Connect a device to X0 (Channel 1) or X2 (Channel 2) that will provide the high-speed pulses to the expansion module.
2. Configure for HSC mode using the configuration register MW0010 (Channel 1) or MW0040 (Channel 2).
3. Write the HSC preset count value in MW0013 (Channel 1) or MW0043 (Channel 2).
4. Enable the HSC by setting the HSC Enable Bit M00240 (Channel 1) or M00720 (Channel 2).
5. HSC increments (starting from 0) or decrements (starting from 4,294,967,295) the current value register in MW0011 (Channel 1) or MW0041 (Channel 2) until the preset value is reached. Then HSC sets Y2 (Channel 1) or Y3 (Channel 2).
6. Enable the HSC Reset Bit by setting M00241 (Channel 1) or M00721 (Channel 2). Or by setting Reset Pin X4 (Channel 1) or Reset Pin X5 (Channel 2). This will cause the HSC current value to reset back to 0 and the output Y2 (Channel 1) or output Y3 (Channel 2) will reset (clear) to 0.

7. To start the process again, simply reset (clear) the HSC Reset Bit and set the HSC Enable Bit.
   Note: If the HSC Enable Bit is still ON, you must reset (clear) this bit, and then set it again.

High-Speed Expansion Modules (MLE-0808NH, MLE-0808PH)

The MLE-0808NH and MLE-0808PH expansion modules support four Single Phase Up counters at speeds of up to 25kHz or two Quadrature counters in 1X, 2X, or 4X modes at speeds of up to 5kHz on Channel 1 or 20kHz on Channel 2. If both channels are used simultaneously in quadrature mode, the max speed is 5kHz for both.

Function	Channel 1	Channel 2	Channel 3	Channel 4	IEC Data Type
Trigger Input (Single Phase)	X**nn**000	X**nn**005	X**nn**002	X**nn**007	BOOL
Encoder A (Quadrature)	X**nn**000	NA	X**nn**002	NA	BOOL
Encoder B (Quadrature)	X**nn**005	NA	X**nn**007	NA	BOOL
HW Reset Input (Single Phase)	X**nn**001	X**nn**006	X**nn**003	X**nn**004	BOOL
HW Reset Input (Quadrature)	X**nn**001	NA	X**nn**003	NA	BOOL
Reset Bit (Internal)	M**nn**209	M**nn**273	M**nn**337	M**nn**401	BOOL
Done Output (Single Phase)	Y**nn**001	Y**nn**006	Y**nn**007	Y**nn**000	BOOL
Done Output (Quadrature)	Y**nn**001	NA	Y**nn**007	NA	BOOL
Preset Reached (Internal Done Bit)	X**nn**048	X**nn**049	X**nn**050	X**nn**051	BOOL
Enable Bit	M**nn**208	M**nn**272	M**nn**336	M**nn**400	BOOL
Configuration Register	MW**nn**10	MW**nn**14	MW**nn**18	MW**nn**22	WORD
Preset Register (LSW, MSW)	MW**nn**11, MW**nn**12	MW**nn**15, MW**nn**16	MW**nn**19, MW**nn**20	MW**nn**23, MW**nn**24	DWORD
Count Register (LSW, MSW)	XW**nn**04, XW**nn**05	XW**nn**06, XW**nn**07	XW**nn**08, XW**nn**09	XW**nn**10, XW**nn**11	DWORD

Notes: **nn** is the slot in which the module is installed.

These tags are assigned automatically when a project is created:

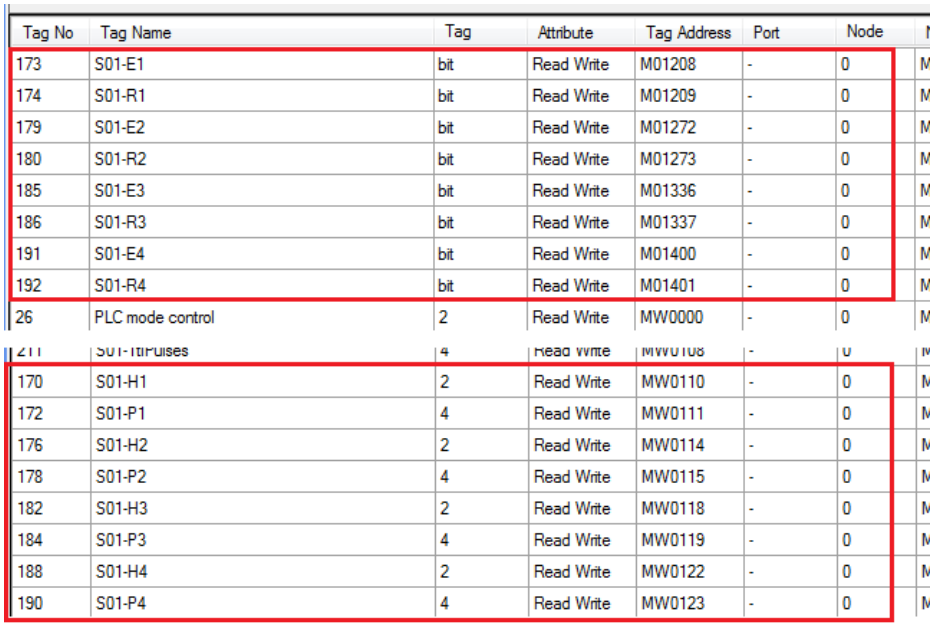

Tag No	Tag Name	Tag	Attribute	Tag Address	Port	Node
173	S01-E1	bit	Read Write	M01208	-	0
174	S01-R1	bit	Read Write	M01209	-	0
179	S01-E2	bit	Read Write	M01272	-	0
180	S01-R2	bit	Read Write	M01273	-	0
185	S01-E3	bit	Read Write	M01336	-	0
186	S01-R3	bit	Read Write	M01337	-	0
191	S01-E4	bit	Read Write	M01400	-	0
192	S01-R4	bit	Read Write	M01401	-	0
26	PLC mode control	2	Read Write	MW0000	-	0
211	S01-HiPulses	4	Read Write	MW0108	-	0
170	S01-H1	2	Read Write	MW0110	-	0
172	S01-P1	4	Read Write	MW0111	-	0
176	S01-H2	2	Read Write	MW0114	-	0
178	S01-P2	4	Read Write	MW0115	-	0
182	S01-H3	2	Read Write	MW0118	-	0
184	S01-P3	4	Read Write	MW0119	-	0
188	S01-H4	2	Read Write	MW0122	-	0
190	S01-P4	4	Read Write	MW0123	-	0

Configuration Register

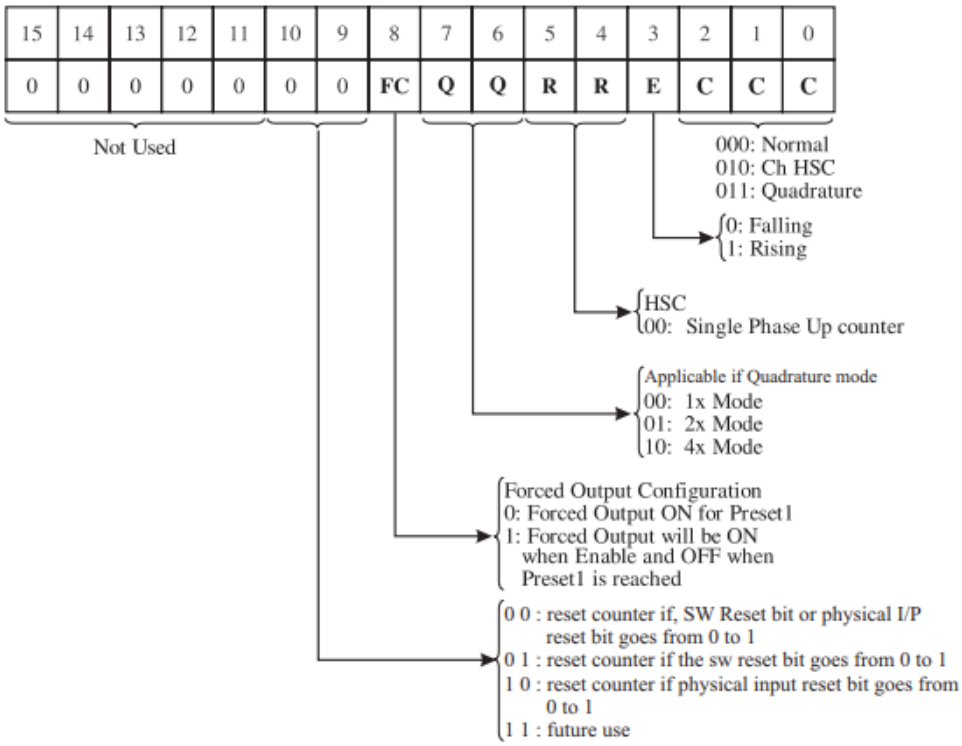

Reference the table below when configuring each HSC Configuration Register (MW**nn**10, MW**nn**14, MW**nn**18, or MW**nn**22):

Input Mode	Output Mode	Register Value
Normal Input (HSC not enabled)	N/A	0
High-Speed Single Phase UP Counter	HW Done output ON when preset is reached	2
	HW Done output ON when counter is enabled, OFF when preset is reached	258
Quadrature 1X	HW Done output ON when preset is reached	3
	HW Done output ON when counter is enabled, OFF when preset is reached	259
Quadrature 2X	HW Done output ON when preset is reached	67
	HW Done output ON when counter is enabled, OFF when preset is reached	323
Quadrature 4X	HW Done output ON when preset is reached	131
	HW Done output ON when counter is enabled, OFF when preset is reached	387

Configuring Pulse Width Modulation (PWM)

Pulse Width Modulation (PWM) is a technique used in a wide variety of control systems to mimic analog signals using a Digital (Discrete) Output. The output is toggled on and off at high speeds as a square waveform at variable frequencies and duty cycles (duration of ON time vs OFF time). MAPware-7000 supports four options when configuring an output for PWM:

- Normal Mode – This function is used to output a variable duty cycle pulse train. This option uses a set frequency that is pre-defined before operation and a duty cycle which can be adjusted during operation. The controllable duty cycle is 0 to 100% (1% units). The PWM output is enabled when the pulse enable flag is ON. While the pulse enable flag is ON, the duty cycle (ON duty) can be changed by changing the duty setting value (0 to 100). The frequency setting is available in the range of 0 to 200 kHz (1 Hz units) before turning ON the pulse enable flag. Both Channel 1 and Channel 2 outputs can be enable and disabled independently.

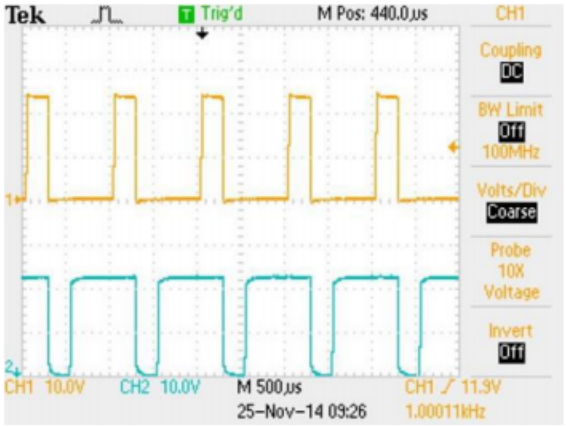

Channel 1 Duty Cycle is 25%
Channel 2 Duty Cycle is 75%

- CW/CCW (Clockwise/Counter Clockwise) Mode – This mode uses two output (Y) pins- one for clockwise movement and the other for counter-clockwise movement. When the frequency is positive, the output signal is generated on Channel 1 (clockwise), and Channel 2 is not used. When the frequency value is negative, the output signal is generated on Channel 2 (counter clockwise), and Channel 1 is not used. The frequency can be adjusted while running, and the Duty Cycle is fixed at 50%.

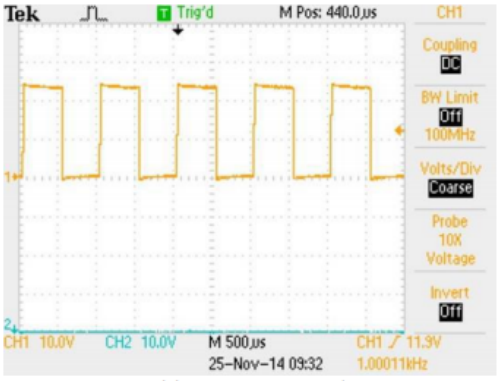

Positive Frequency Value

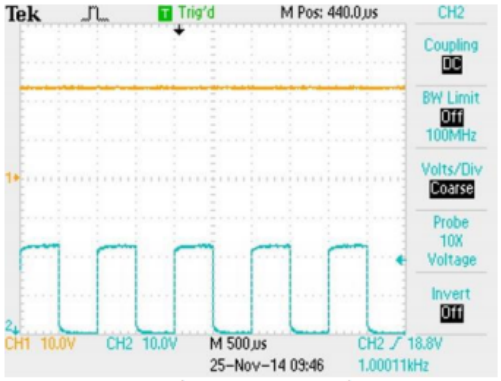

Negative Frequency Value

- Pulse/Direction Mode – This mode uses two output (Y) pins- one for pulse output and the other to indicate direction. The output signal is generated on Channel 1. If the frequency value is positive, Channel 2 is held low. If the frequency value is negative, Channel 2 is held high. The frequency can be adjusted while running, and the Duty Cycle is fixed at 50%.

Positive Frequency Value

Negative Frequency Value

- Fixed Pulse (Trapezoidal) Mode – This mode ramps from a minimum frequency to a maximum frequency and then back down and stops after a preconfigured number of pulses. A minimum frequency and maximum frequency are selected. An acceleration/deceleration time is set and total number of pulses is selected. The frequency ramps up from the minimum frequency to the maximum frequency in the interval specified by acceleration time. The output signal is generated until the specified number of pulses has been sent. As the number of pulses approaches the specified count, the frequency ramps down from the maximum frequency to the minimum frequency in the interval specified by deceleration time. The acceleration and deceleration is normally done in 30 steps. When the specified number of pulses is reached, the output signal stops but remains enabled. The Duty Cycle is fixed at 50%.

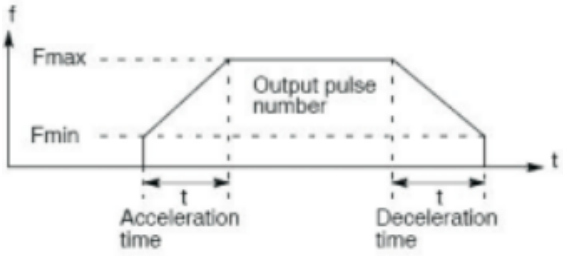

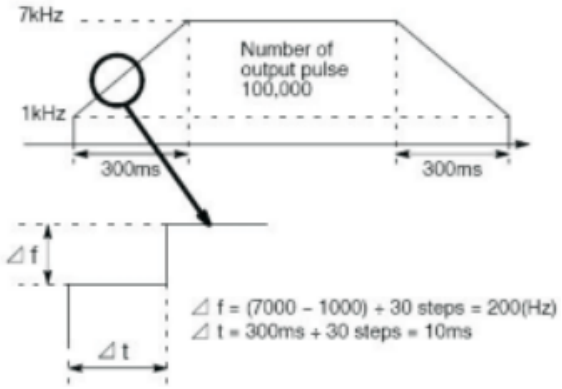

Note: Normal mode can be run on channels 1 and 2 simultaneously. The CW/CCW, and Pulse/Direction modes can be configured on channel 1 only, and use both channels; channel 2 cannot be used for another mode. Fixed Pulse mode cane be run on both channels on CPU base units, but is only available on channel 1 on high speed expansion modules.

The following bits and registers are associated with PWM operation:

Register/ Bit	Description	CPU Base Unit Settings	MLE-D0808NH/PH Settings
Configuration Register	The 16-bit register that controls how the PWM operates.	0: Not Defined 1: Normal (Fixed Frequency) 2: Normal (Variable Frequency) 3: CW/CCW (Fixed Frequency) 4: CW/CCW (Variable Frequency) 7: Pulse/Dir (Fixed Frequency) 8: Pulse/Dir (Variable Frequency) 9: Fixed Pulse	0: Not Defined 1: Normal (Fixed Frequency) 3: CW/CCW (Variable Frequency) 7: Pulse/Dir (Variable Frequency) 9: Fixed Pulse
Frequency Setting or Minimum Frequency Register	The 32-bit register sets the Frequency (Normal, CW/CCW, Pulse/Dir modes) or the Minimum Frequency (Fixed Pulse mode).	Range: **MLC1-F Models:** 1 to 100,000 (Normal or Fixed Pulse modes) -100,000 to -1 or 1 to 100,000 (CW/CCW or Pulse/Dir mode) **MLC1-E & MLC2-E Models:** 1 to 200,000 (Normal or Fixed Pulse modes) -200,000 to -1 or 1 to 200,000 (CW/CCW or Pulse/Dir mode)	Range: 1 to 10,000 (Normal or Fixed Pulse modes) -10,000 to -1 or 1 to 10,000 (CW/CCW or Pulse/Dir mode)
ON Duty or Maximum Frequency Register	The 32-bit register defines the ON duty time (Normal mode) or the Maximum Frequency (Fixed Pulse mode).	Range: 1 to 100 (Normal) 1 to 100,000 (Fixed Pulse mode)	Range: 1 to 100 (Normal) 1 to 100,000 (Fixed Pulse mode)
Acceleration Time	The 16-bit register that determines the acceleration time (Fixed Pulse Mode).	Range: 0 to 65535 (10 msec)	Range: 0 to 32767 (in msec)
Deceleration Time	The 16-bit register that determines the deceleration time (Fixed Pulse Mode).	Range: 0 to 65535 (10 msec)	Range: 0 to 32767 (in msec)
Total Pulses Register	The 32-bit register defines the Total Number of Pulses (Fixed Pulse mode).	Range: 128 to 4,294,967,296	Range: 0 to 2,147,483,647
Elapsed Value Register	The 32-bit register records the Elapsed Value (Fixed Pulse mode).	Range: 0 to 4,294,967,296	Range: 0 to 2,147,483,647
Pulse Enable	Starts sending the PWM signal to the output pin.		
End of Total Pulses	Indicates when the Total Number of Pulses (Fixed Pulse mode) has been reached.		
On Duty Setting error	Indicates if the value for the Duty Cycle is out of range.		
Frequency Setting error	Indicates if the value for Frequency is out of range.		
Acceleration Time Setting error	Indicates if the value for Acceleration Time is out of range.		
Deceleration Time Setting error	Indicates if the value for Deceleration Time is out of range.		
No of Total Pulses error	Indicates if the value for Total No of Pulses is out of range.		

Configuration Register

The registers and I/O associated with the PWM depend on the hardware.

For MLC Series CPU Base modules:

Function	Channel 1	Channel 2
Output Pin	Y0	Y1
Enable Bit	M816	M832
ON Duty Setting Error	M818	M834
Frequency Setting Error	M819	M835
Acceleration Time Setting Error	M820	M836
Deceleration Time Setting Error	M821	M837
No of Total Pulse Setting Error	M822	M838
End of Total Pulses	M823	M839
Configuration Register	MW59	MW75
Frequency or Min Frequency Register (LSW, MSW)	MW60, MW61	MW76, MW77
ON Duty or Max Frequency Register (LSW, MSW)	MW62, MW63	MW78, MW79
Acceleration Time Setting Register	MW64	MW80
Deceleration Time Setting Register	MW65	MW81
Total Pulses Setting Register	MW66, MW67	MW82, MW83
Elapsed Value Register	MW68, MW69	MW84, MW85

These tags are assigned automatically when a project is created:

Tag No	Tag Name	Tag	Attribute	Tag Address	Port	Node	Node Na
88	Pulse Enable Flag (CH1)	bit	Read Write	M00816	-	0	MLC1-E1
93	ON duty setting error flag (CH1)	bit	Read Only	M00818	-	0	MLC1-E1
94	Frequency Setting error flag (CH1)	bit	Read Only	M00819	-	0	MLC1-E1
95	Acceleration Time Setting error flag (CH1)	bit	Read Only	M00820	-	0	MLC1-E1
96	Deceleration Time Setting error flag (CH1)	bit	Read Only	M00821	-	0	MLC1-E1
97	No of Total Pulses Setting error flag (CH1)	bit	Read Only	M00822	-	0	MLC1-E1
98	End of Total Pulses Flag (CH1)	bit	Read Only	M00823	-	0	MLC1-E1
108	Pulse Enable Flag (CH2)	bit	Read Write	M00832	-	0	MLC1-E1
109	ON duty setting error flag (CH2)	bit	Read Only	M00834	-	0	MLC1-E1
110	Frequency Setting error flag (CH2)	bit	Read Only	M00835	-	0	MLC1-E1
111	Acceleration Time Setting error flag (CH2)	bit	Read Only	M00836	-	0	MLC1-E1
112	Deceleration Time Setting error flag (CH2)	bit	Read Only	M00837	-	0	MLC1-E1
113	No of Total Pulses Setting error flag (CH2)	bit	Read Only	M00838	-	0	MLC1-E1
114	End of Total Pulses Flag (CH2)	bit	Read Only	M00839	-	0	MLC1-E1
85	PWM Configure Reg(CH1)	2	Read Write	MW0059	-	0	MLC1-E1
86	Frequency/Min Freq Setting Reg (CH1)	4	Read Write	MW0060	-	0	MLC1-E1
87	ON duty / Max. Freq. setting register(CH1)	4	Read Write	MW0062	-	0	MLC1-E1
89	Acceleration Time (CH1)	2	Read Write	MW0064	-	0	MLC1-E1
90	Deceleration Time (CH1)	2	Read Write	MW0065	-	0	MLC1-E1
91	Total Pulses (CH1)	4	Read Write	MW0066	-	0	MLC1-E1
92	Elapsed Value (CH1)	4	Read Only	MW0068	-	0	MLC1-E1
101	PWM Configure Reg(CH2)	2	Read Write	MW0075	-	0	MLC1-E1
102	Frequency/Min Freq Setting Reg (CH2)	4	Read Write	MW0076	-	0	MLC1-E1
103	ON duty / Max. Freq. setting register(CH2)	4	Read Write	MW0078	-	0	MLC1-E1
104	Acceleration Time (CH2)	2	Read Write	MW0080	-	0	MLC1-E1
105	Deceleration Time (CH2)	2	Read Write	MW0081	-	0	MLC1-E1
106	Total Pulses (CH2)	4	Read Write	MW0082	-	0	MLC1-E1
107	Elapsed Value (CH2)	4	Read Only	MW0084	-	0	MLC1-E1

For MLE-0808NH and MLE-0808PH High-Speed IO Expansion modules:

Function	Channel 1	Channel 2
Output Pin	Y**nn**002	Y**nn**004
Enable Bit	M**nn**016	M**nn**018
Direction Flag	M**nn**017	NA*
Configuration Register	MW**nn**00	MW**nn**26
Frequency or Min Frequency Register (LSW, MSW)	MW**nn**02, MW**nn**03	NA*
ON Duty or Max Frequency Register (LSW, MSW)	MW**nn**04, MW**nn**05	MW**nn**27, MW**nn**28
Acceleration Time Setting Register	MW**nn**06	NA*
Deceleration Time Setting Register	MW**nn**07	NA*
Total Pulses Setting Register	MW**nn**08, MW**nn**09	NA*

Notes: **nn** *is the slot in which the module is installed.*

**- PWM Channel 2 does not support Fixed Pulse, CW-CCW, or Pulse DIR modes. When using Normal Mode, both channels will have the same frequency, but separate duty cycles.*

These tags are assigned automatically when a project is created:

Tag No	Tag Name	Tag	Attribute	Tag Address	Port	Node	Node I
192	S01-PE1	bit	Read Write	M01016	-	0	MLC1-E
194	S01-DirMrkr	bit	Read Write	M01017	-	0	MLC1-E
193	S01-PE2	bit	Read Write	M01018	-	0	MLC1-E
187	S01-PWM1	2	Read Write	MW0100	-	0	MLC1-E1
189	S01-Freq	4	Read Write	MW0102	-	0	MLC1-E1
190	S01-Dty1	4	Read Write	MW0104	-	0	MLC1-E1
202	S01-A_T	2	Read Write	MW0106	-	0	MLC1-E1
203	S01-D_T	2	Read Write	MW0107	-	0	MLC1-E1
204	S01-TtlPulses	4	Read Write	MW0108	-	0	MLC1-E1
188	S01-PWM2	2	Read Write	MW0126	-	0	MLC1-E1
191	S01-Dty2	4	Read Write	MW0127	-	0	MLC1-E1

Configuration Tag Names

Tag names for the various configuration settings registers and bit vary depending on location. Tag names listed below are created when the project is created in Native Ladder Logic mode. If IEC mode is selected, all spaces and dashes are replaced with underscores and all parentheses are omitted in the tag names.

Base Unit Tag Name	Expansion Module attached to MLC1/2	Expansion Module attached to MLC3
High Speed Counter Settings		
HSC Enable Bit (CH1/3)	S**nn**-E1-4	Slot**nn**-CH1-4_HSC_EnableBit
HSC Reset Bit (CH1/3)	S**nn**-R1-4	Slot**nn**-CH1-4_HSC_ResetBit
HSC Preset Reached (CH1/3)	S**nn**-PR1-4	Slot**nn**-CH1-4_HSC_PresetReached
HSC Configuration register (CH1/3)	S**nn**-H1-4	Slot**nn**-CH1-4_HSC_ConfigReg
High-Speed Counter (HSC) Register (CH1/3)	S**nn**-C1-4	Slot**nn**-CH1-4_HSC_Register
HSC Preset Register (CH1/3)	S**nn**-P1-4	Slot**nn**-CH1-4_HSC_PresetReg
Pulse Width Modulation Settings		
Pulse Enable Flag (CH1-2)	S**nn**-PE1-2	Slot**nn**-CH1-2_Pulse_EnableFlag
PWM Configure Reg(CH1-2)	S**nn**-PWM1-2	Slot**nn**-CH1-2_PWM_ConfigReg
Acceleration time(CH1-2)	S**nn**-AcT	Slot**nn**-Acceleration time
Deceleration Time(CH1-2)	S**nn**-DcT	Slot**nn**-Deceleration Time
Frequency Setting register / Min. Freq. Setting register (CH1-2)	S**nn**-Freq	Slot**nn**-Frequency Setting register Or Min. Freq. Setting register
ON duty setting register / Max. Freq. setting register (CH1)	S**nn**-Dty1	Slot**nn**-CH1_ON_Duty_SettingRegOrMaxFreqSettingReg
ON duty setting register / Max. Freq. setting register (CH2)	S**nn**-Dty2	Slot**nn**-CH2_ON_Duty_SettingReg
Total Pulses (CH1-2)	S**nn**-TtlPulses	Slot**nn**-Total Pulses
Elapsed Value (CH1-2)	S**nn**-ElpsdVal	Slot**nn**-Elapsed Value
End of Total Pulses Flag (CH1-2)	S**nn**-PulseFinish	Slot**nn**-End of Total Pulses Flag
ON duty setting error flag (CH1-2)	S**nn**-DtyEr1-2	Slot**nn**-CH1-2_ON_Duty_SettingErrFlag
Frequency Setting error flag (CH1-2)	S**nn**-FreqEr	Slot**nn**-Frequency Setting error flag
Acceleration Time Setting error flag (CH1-2)	S**nn**-AcelEr	Slot**nn**-Acceleration Time Setting error flag
Deceleration Time Setting error flag (CH1-2)	S**nn**-DecelEr	Slot**nn**-Deceleration Time Setting error flag
No of Total Pulses Setting error flag (CH1-2)	S**nn**-TtlPulsesEr	Slot**nn**-No of Total Pulses Setting error flag
	S**nn**-DirMrkr	Slot**nn**-Direction Marker Flag
InputReg_00000-7	S**nn**-XW0-7	Slot**nn**-In_Reg_00000-7
OutputReg _00000-7	S**nn**-YW0-7	Slot**nn**-OutputReg _00000-7

Note: **nn** is the slot in which the module is installed.

Configuring Analog Inputs/Outputs

The following models support analog inputs/outputs:

Model(s)	Analog Input Modes	Configuration Registers	Analog Output Modes	Configuration Registers
MLC1-F0808Y0201 MLC1-F0808P0201 MLC1-F0808N0201	2 channels: 4 to 20mA, 0 to 20mA 0 to 10V, 0 to 5V	Channel0 (MW71) Channel1 (MW72)	1 channel: 4 to 20mA	Channel0 (MW73)
MLC1-E1616Y0201 MLC1-E1616P0201 MLC1-E1616N0201 MLC1-F1616P0201	2 channels: 4 to 20mA, 0 to 20mA 0 to 10V, 0 to 5V	Channel0 (MW71) Channel1 (MW72)	1 channel: 4 to 20mA 0 to 10V	Channel0 (MW73)
MLC1-E0808Y0402T	4 channels: 4 to 20mA, 0 to 20mA 0 to 10V, 0 to 5V 0 to 100mV, 0 to 50mV RTD PT100 (Alpha1, Alpha2) Thermocouple (Types J, K)	Channel0 (MW71) Channel1 (MW72) Channel2 (MW87) Channel3 (MW88)	2 channels: 4 to 20mA 0 to 10V	Channel0 (MW73) Channel1 (MW89)
MLC2-E0404Y0802T	4 channels: 4 to 20mA, 0 to 20mA 0 to 10V, 0 to 5V 0 to 100mV, 0 to 50mV RTD PT100 (Alpha1, Alpha2) Thermocouple (Types J, K) 4 channels: 4 to 20mA, 0 to 20mA	Channel0 (MW71) Channel1 (MW72) Channel2 (MW87) Channel3 (MW88) Channel4 (MW94) Channel5 (MW95) Channel6 (MW96) Channel7 (MW97)	2 channels: 4 to 20mA 0 to 10V	Channel0 (MW73) Channel1 (MW89)
MLE-A0800	8 channels: 4 to 20mA 0 to 10V	Channel1 (MWnn08) Channel2 (MWnn12) Channel3 (MWnn16) Channel4 (MWnn20) Channel5 (MWnn24) Channel6 (MWnn28) Channel7 (MWnn32) Channel8 (MWnn36) Input Conversion Enable (MWnn40)	NA	NA
MLE-A0004	NA	NA	4 channels: 4 to 20mA 0 to +10V	Channel1 (MW**nn**04) Channel2 (MW**nn**08) Channel3 (MW**nn**12) Channel4 (MW**nn**16) Output Conversion Enable (MW**nn**20)
MLE-A0402T	4 channels: 4 to 20mA, 0 to 20mA 0 to 10V, 1 to 5V 0 to 100mV, 0 to 50mV RTD PT100 (Alpha1, Alpha2) Thermocouple (Types B, R, S, E, J, K, N, T)	Channel1 (MW**nn**06) Channel2 (MW**nn**10) Channel3 (MW**nn**14) Channel4 (MW**nn**18) Input/Output Conversion Enable (MW**nn**30)	2 channels: 4 to 20mA 0 to 10V	Channel1 (MW**nn**22) Channel2 (MW**nn**26)

Analog Input Configuration Register Values

Configuration register values differ between the CPU base units and expansion modules. Not all operating modes are available for all models. See table above for available input modes.

CPU Base Units w/ Built-in Analog I/O:

- MLC1-F0808Y0201
- MLC1-F0808P0201
- MLC1-F0808N0201
- MLC1-F1616P0201
- MLC1-E1616Y0201
- MLC1-E1616P0201
- MLC1-E1616N0201
- MLC1-E0808Y0402T
- MLC2-E0404Y0802T

Operating Mode	Configuration Register Value
Not Defined	0
0 to 10V	1
4 to 20 mA	2
0 to 20 mA	3
0 to 100mV	4
0 to 50mV	5
0 to 5V	6
RTD PT100 Alpha1	7
RTD PT100 Alpha2	8
Thermocouple (Type J)	14
Thermocouple (Type K)	15

Analog Expansion Modules:

- MLE-A0800
- MLE-A0004
- MLE-A0402T

Operating Mode	Configuration Register Value
Not Defined	0
0 to 100mV	1
0 to 50mV	3
0 to 20 mA	5
4 to 20 mA	7
RTD PT100 Alpha1	9
RTD PT100 Alpha2	10
Thermocouple (Type B)	11
Thermocouple (Type R)	12
Thermocouple (Type S)	13
Thermocouple (Type E)	14
Thermocouple (Type J)	15
Thermocouple (Type K)	16
Thermocouple (Type N)	17
Thermocouple (Type T)	18
0 to 10V	19
1 to 5V	20
RTD PT1000	21

Data Format for Analog Inputs

The values in the appropriate analog input register range from 0-64000 in CPU base units and 0-65535 in the expansion modules listed above.

CPU Base Unit Reg Value	Expansion Module Reg Value	Input Values						
		0 to 20mA	4 to 20mA	0 to 10V	0 to 5V	1 to 5V	0 to 100mV	0 to 50mV
0	0	0mA	4mA	0V	0V	1V	0mV	0mV
16000	16384	5mA	8mA	2.5V	1.25V	2V	25mV	12.5mV
32000	32768	10mA	12mA	5V	2.5V	3V	50mV	25mV
48000	49152	15mA	16mA	7.5V	3.75V	4V	75mV	37.5mV
64000	65535	20mA	20mA	10V	5V	5V	100mV	50mV
65000	N/A	<0mA	<4mA	<0V	<0V	N/A	<0V	<0V
65001	N/A	>20mA	>20mA	>10V	>5V	N/A	>100mA	>50mV

For RTD/Thermocouple

Digital Count Value = 10 * Temperature (in C)

The digital count value is in signed integer format. For example, if the temperature is 57.6 degrees C, the digital count in the XW register will be 578.

Analog Output Configuration Register Values

Configuration register values differ between the CPU base units and expansion modules. Not all operating modes are available for all models. See table above for available input modes.

Operating Mode	CPU Base Units Configuration Register Value	Expansion Modules Configuration Register Value
Not Defined	0	0
4 to 20 mA	5	1
0 to +10V	2	2

Data Format for Analog Outputs

CPU base units have an analog output resolution of 12 bits with values ranging from 0-4095. Analog expansion modules have an output resolution of 16 bits with values ranging from 0-65535.

CPU Base Unit Reg Value	Expansion Module Reg Value	Output Values	
		0 to 10V	4 to 20mA
0	0	0	4mA
1024	16384	2.5V	8mA
2048	32768	5V	12mA
3072	49152	7.5V	16mA
4095	65535	10V	20mA

FX-Series Non-Expandable CPU Base Units

MLC1-F0604N (CPU w/ 6 Digital Input, 5 Sinking Output)

This non-expandable CPU module has six bidirectional inputs and five NPN digital outputs. Four of the inputs can be configured for two high-speed counters (HSC) using the MW registers. When used as HSCs, inputs X0 & X1 (channel 1) and X2 & X3 (channel 2/3) are used to record incoming pulses. One of the outputs (Y0) can be configured for Pulse Width Modulation (PWM).

The specification below provides information about the inputs/outputs only. For more information regarding communications ports, etc. consult the data sheet.

Specifications:

Power	24VDC, 300mA (+20%; -15%)
Approvals	CE, UL
Connection method	Removable terminal (3.81 mm pitch)
Hardware	
Memory	90 KB Application Memory, 198 KB Ladder Memory
Serial	1 RS232
USB Slave	Upload/download projects
Digital Inputs	6 bidirectional inputs (4 high-speed X0, X1, X2, and X3)
Rated input voltage	24 VDC
Rated input current	5mA (typical)
Input impedance	3K ohms
Minimum ON voltage	15 VDC
Maximum ON voltage	30 VDC
Minimum OFF voltage	-3 VDC
Maximum OFF voltage	5 VDC
Turn ON Time	10 msec
Turn OFF Time	10 msec
Isolation	Optically isolated from internal circuit

High-Speed Counter (HSC) Mode	
No. of inputs	2 channels (X0/X1, and X2/X3) in Single Phase Up Counter mode or in Quadrature 4X mode
Physical reset inputs	X4 (channel 1) and X5 (channel 2)
Configurable forced outputs (opt)	Y2 (channel 1) and Y3 (channel 2)
Maximum Input Frequency (per channel)	200 KHz
Maximum Input Count	4,294,967,295 (32-bit) with 1 count register and 1 preset register per channel
Digital Outputs	5 sinking outputs (NPN-type)
Output Capacity	300mA per output maximum
Rated load	300mA @ 30VDC
Nominal load	NPN: 80Ω 7.2W (resistive load)@24VDC 7.2VA (inductive load, Unity Power Factor)
Minimum ON voltage output	22VDC (measured across load)
Maximum ON voltage output	30VDC (measure across load)
Minimum OFF voltage output	0.2VDC
Maximum OFF voltage output	1VDC
Short Circuit Protection	Yes
Pulse Width Modulation (PWM) Mode	
No. of Outputs	1 [Y0 (channel 1)]
PWM frequency (variable)	100 KHz maximum
General	
Operating Temperature	0 to 55°C
Operating Humidity	10% to 90% (non-condensing)
Mechanical Dimension (LxWxH)	3.94x1.02x2.76 inches [100x26x70mm]

Configuration:

Use MAPware-7000 to assign input (X and XW), output (Y and YW) and configuration (M and MW) memory addresses to the module.

Function	Register		Access
X0-X5 Digital Inputs	X00000-5 (XW0000)		Read Only
Y0-Y4 Digital Outputs	Y00000-4 (YW0000)		Read/Write
Single Phase Up/Down Option	**HSC Channel 1**	**HSC Channel 2/3**	
HSC Input Pin	X0	X2	Read Only
Direction Pin (Count Up if ON, Down if OFF)	X1	X3	Read Only
Quadrature Inputs	**Pair 1**	**Pair 2**	
Counter Inputs	X0, X1	X2, X3	Read Only
Physical reset inputs	X4	X5	Read Only
HSC Configuration Register	MW0010	MW0040	Read/Write
HSC Counter Register (Current Value)	MW0011	MW0041	Read/Write
HSC Preset Register	MW0013	MW0043	Read/Write
HSC Enable Bit	M00240	M00720	Read/Write
HSC Reset Bit	M00241	M00721	Read/Write
HSC Preset Reached Bit	M00242	M00722	Read Only
Output Flag	Y2	Y3	Read/Write
PWM Outputs	**Channel 1**	**N/A**	
Output	Y0	N/A	Read Only
PWM Configuration Register	MW0059	N/A	Read/Write
Frequency Setting Register	MW0060	N/A	Read/Write
ON Duty Setting Register (Duty Cycle)	MW0062	N/A	Read/Write
Pulse Enable Flag	M00816	N/A	Read/Write
ON Duty Setting Error Flag	M00818	N/A	Read Only
Frequency Setting Error Flag	M00819	N/A	Read Only

Reference the table below when configuring each HSC Configuration Register (MW0010 or MW0040):

Input Mode	Output Mode	Register Value
Normal Input (HSC not enabled)	N/A	0
High-Speed Single Phase Counter, Up or Down based on Up/Down input	HW Done Bit Disabled	2
	HW Done output ON when preset is reached	258
	Done output ON when counter is enabled, OFF when preset is reached	770
Quadrature 4X	HW Done Bit Disabled	131
	HW Done output ON when preset is reached	387
	Done output ON when counter is enabled, OFF when preset is reached	899

Reference the table below when configuring the PWM Configuration Registers (MW0059):

Output Mode	Register Value
Normal PWM (fixed frequency)	1
Normal PWM (variable frequency)	2
CW/CCW (fixed frequency)	3
CW/CCW (variable frequency)	4
Pulse/Direction (fixed frequency)	7
Pulse/Direction (variable frequency)	8
Trapezoidal (Fixed Pulse Mode)	9

Wiring:

Bidirectional Inputs (normal) Note: X0, X1, X2, and X3 are high-speed	HSC: Single Phase Up
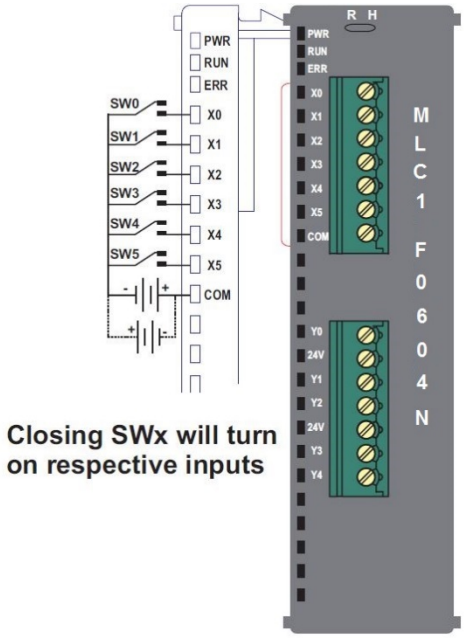	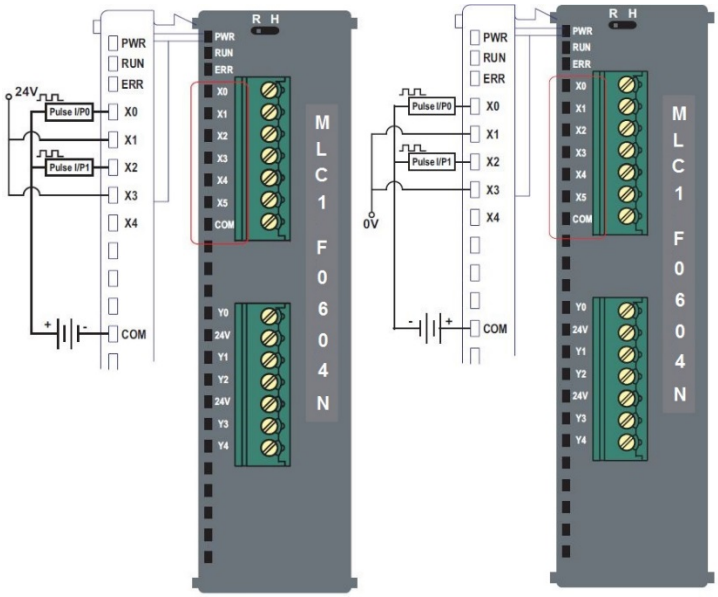

HSC: Quadrature mode	HSC: Single Phase Down
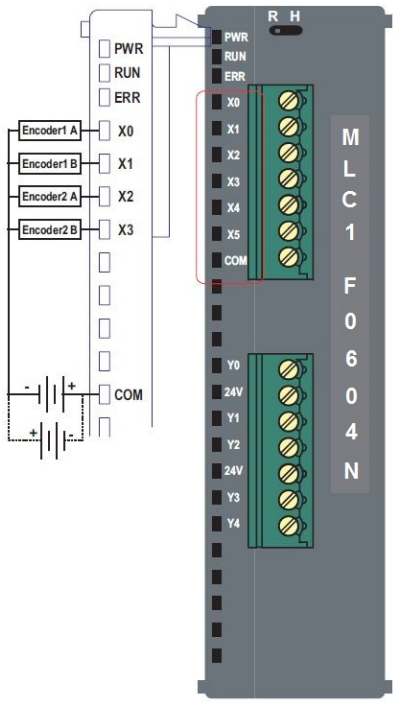	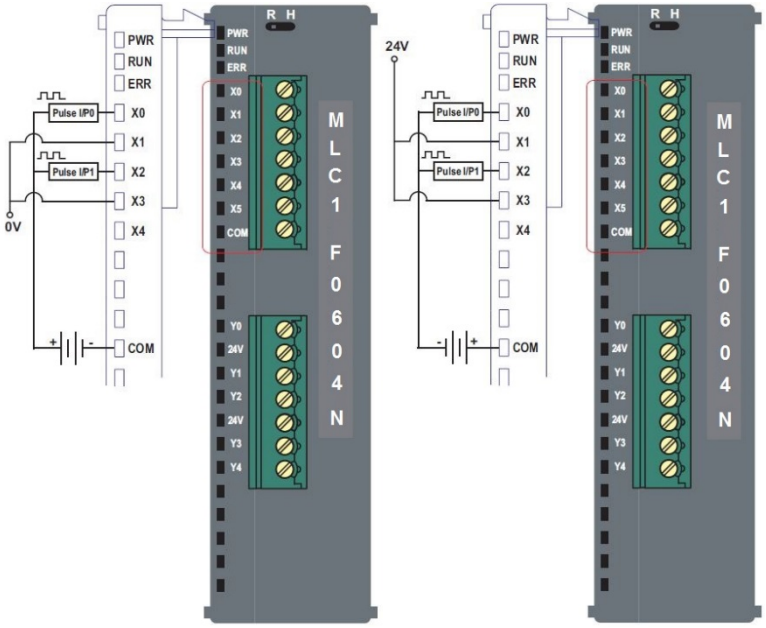
Digital Outputs (normal)	**Outputs (PWM mode)**
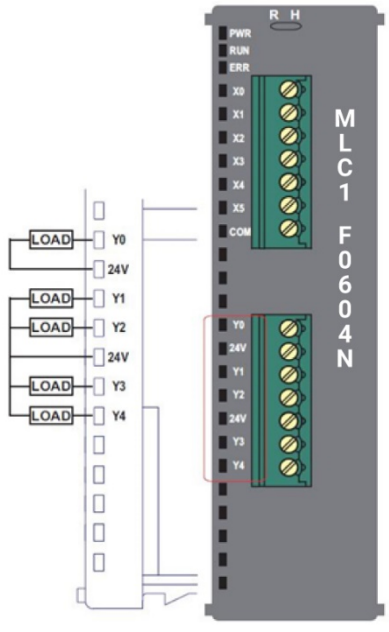	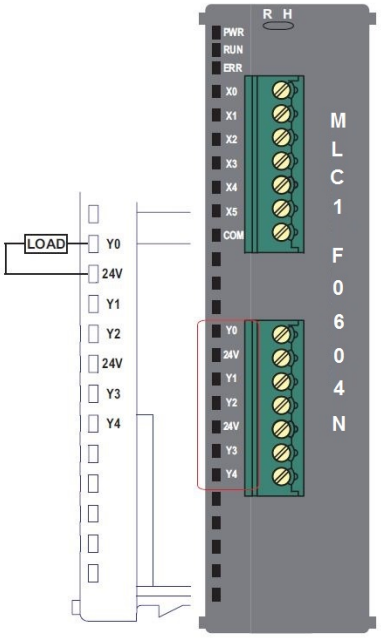

MLC1-F0604P (CPU w/ 6 Digital Input, 5 Sourcing Output)

This non-expandable CPU module has six bidirectional inputs and five PNP digital outputs. Four of the inputs can be configured for two high-speed counters (HSC) using the MW registers. When used as HSCs, inputs X0 & X1 (channel 1) and X2 & X3 (channel 2/3) are used to record incoming pulses. One of the outputs (Y0) can be configured for Pulse Width Modulation (PWM).

The specification below provides information about the inputs/outputs only. For more information regarding communications ports, etc. consult the data sheet.

Specifications:

Power	24VDC, 300mA (+20%; -15%)
Approvals	CE, UL
Connection method	Removable terminal (3.81 mm pitch)
Hardware	
Memory	90 KB Application Memory, 198 KB Ladder Memory
Serial	1 RS232
USB Slave	Upload/download projects
Digital Inputs	6 bidirectional inputs (4 high-speed X0, X1, X2, and X3)
Rated input voltage	24 VDC
Rated input current	5mA (typical)
Input impedance	3K ohms
Minimum ON voltage	15 VDC
Maximum ON voltage	30 VDC
Minimum OFF voltage	-3 VDC
Maximum OFF voltage	5 VDC
Turn ON Time	10 msec
Turn OFF Time	10 msec
Isolation	Optically isolated from internal circuit

High-Speed Counter (HSC) Mode	
No. of inputs	2 channels (X0/X1, and X2/X3) in Single Phase Up Counter mode or in Quadrature 4X mode
Physical reset inputs	X4 (channel 1) and X5 (channel 2)
Configurable forced outputs (opt)	Y2 (channel 1) and Y3 (channel 2)
Maximum Input Frequency (per channel)	200 KHz
Maximum Input Count	4,294,967,295 (32-bit) with 1 count register and 1 preset register per channel
Digital Outputs	5 sourcing outputs (PNP-type)
Output Capacity	250mA per output maximum
Rated load	250mA @ 30VDC
Nominal load	PNP: 96Ω 6W (resistive load)@24VDC 6VA (inductive load, Unity Power Factor)
Minimum ON voltage output	22VDC (measured across load)
Maximum ON voltage output	30VDC (measure across load)
Minimum OFF voltage output	0.2VDC
Maximum OFF voltage output	1VDC
Short Circuit Protection	Yes
Pulse Width Modulation (PWM) Mode	
No. of Outputs	1 [Y0 (channel 1)]
PWM frequency (variable)	100 KHz maximum
General	
Operating Temperature	0 to 55°C
Operating Humidity	10% to 90% (non-condensing)
Mechanical Dimension (LxWxH)	3.94x1.02x2.76 inches [100x26x70mm]

Configuration:

Use MAPware-7000 to assign input (X and XW), output (Y and YW) and configuration (M and MW) memory addresses to the module.

Function	Register		Access
X0-X5 Digital Inputs	X00000-5 (XW0000)		Read Only
Y0-Y4 Digital Outputs	Y00000-4 (YW0000)		Read/Write
Single Phase Up/Down Option	**HSC Channel 1**	**HSC Channel 2/3**	
HSC Input Pin	X0	X2	Read Only
Direction Pin (Count Up if ON, Down if OFF)	X1	X3	Read Only
Quadrature Inputs	**Pair 1**	**Pair 2**	
Counter Inputs	X0, X1	X2, X3	Read Only
Physical reset inputs	X4	X5	Read Only
HSC Configuration Register	MW0010	MW0040	Read/Write
HSC Counter Register (Current Value)	MW0011	MW0041	Read/Write
HSC Preset Register	MW0013	MW0043	Read/Write
HSC Enable Bit	M00240	M00720	Read/Write
HSC Reset Bit	M00241	M00721	Read/Write
HSC Preset Reached Bit	M00242	M00722	Read Only
Output Flag	Y2	Y3	Read/Write
PWM Outputs	**Channel 1**	**N/A**	
Output	Y0	N/A	Read Only
PWM Configuration Register	MW0059	N/A	Read/Write
Frequency Setting Register	MW0060	N/A	Read/Write
ON Duty Setting Register (Duty Cycle)	MW0062	N/A	Read/Write
Pulse Enable Flag	M00816	N/A	Read/Write
ON Duty Setting Error Flag	M00818	N/A	Read Only
Frequency Setting Error Flag	M00819	N/A	Read Only

Reference the table below when configuring each HSC Configuration Register (MW0010 or MW0040):

Input Mode	Output Mode	Register Value
Normal Input (HSC not enabled)	N/A	0
High-Speed Single Phase Counter, Up or Down based on Up/Down input	HW Done Bit Disabled	2
	HW Done output ON when preset is reached	258
	Done output ON when counter is enabled, OFF when preset is reached	770
Quadrature 4X	HW Done Bit Disabled	131
	HW Done output ON when preset is reached	387
	Done output ON when counter is enabled, OFF when preset is reached	899

Reference the table below when configuring the PWM Configuration Registers (MW0059):

Output Mode	Register Value
Normal PWM (fixed frequency)	1
Normal PWM (variable frequency)	2
CW/CCW (fixed frequency)	3
CW/CCW (variable frequency)	4
Pulse/Direction (fixed frequency)	7
Pulse/Direction (variable frequency)	8
Trapezoidal (Fixed Pulse Mode)	9

Wiring:

Bidirectional Inputs (normal) Note: X0, X1, X2, and X3 are high-speed	HSC: Single Phase Up
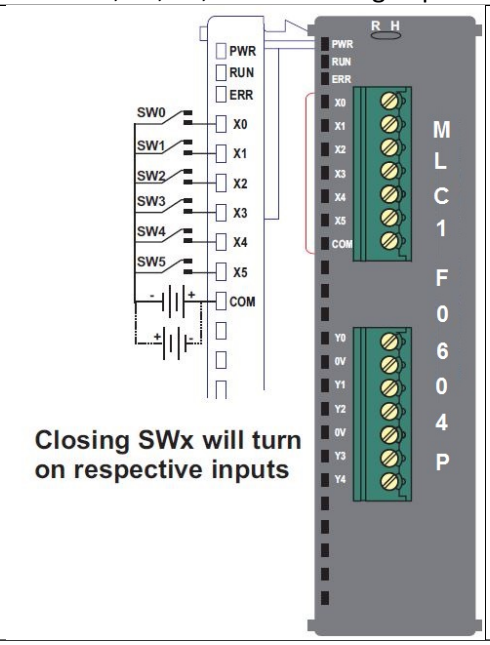	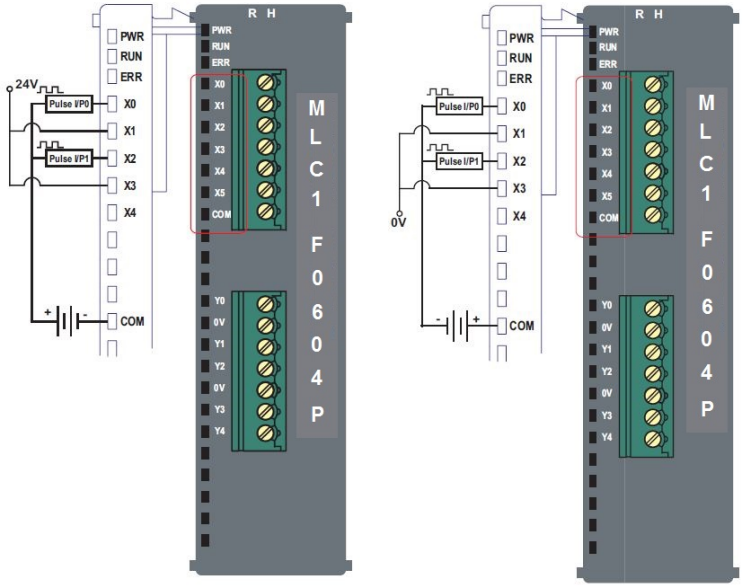

HSC: Quadrature mode	HSC: Single Phase Down
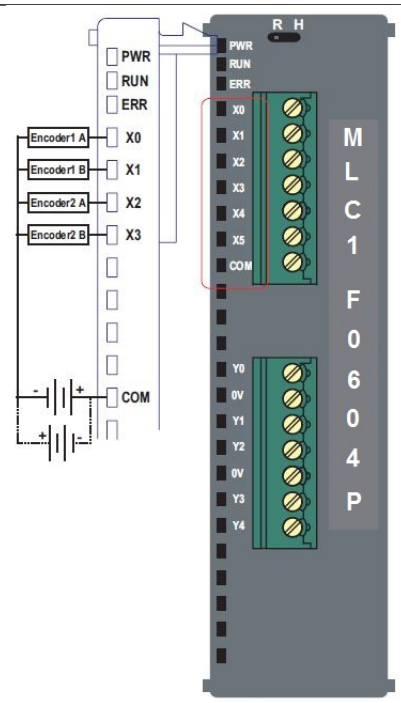	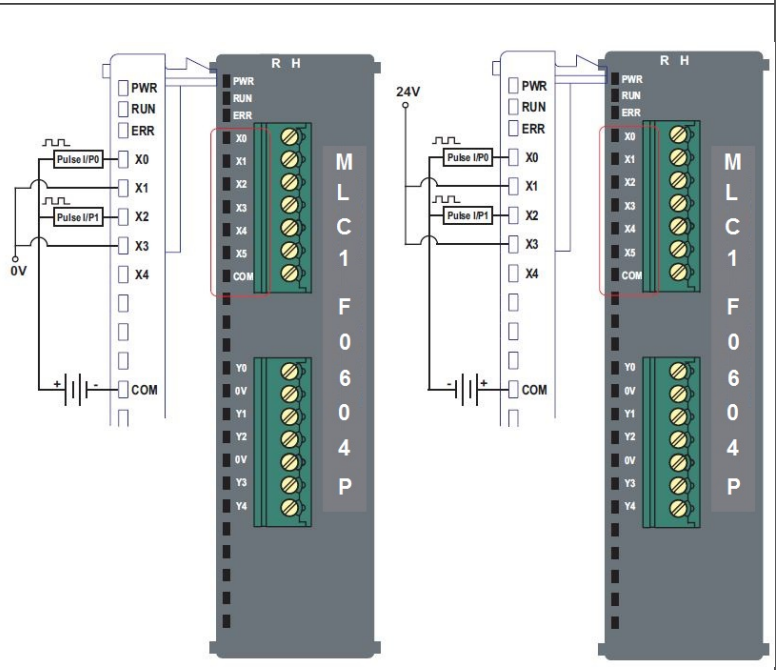
Digital Outputs (normal)	**Outputs (PWM mode)**
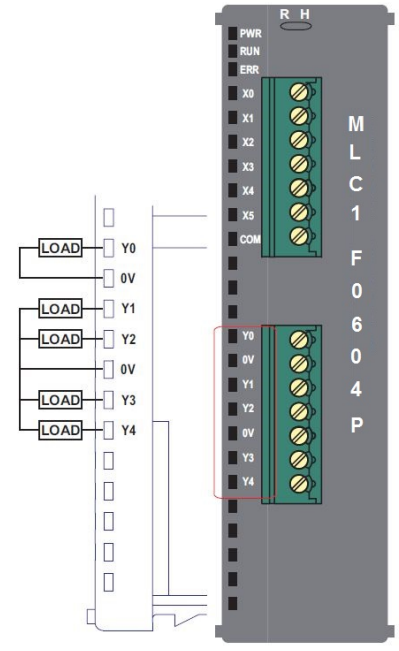	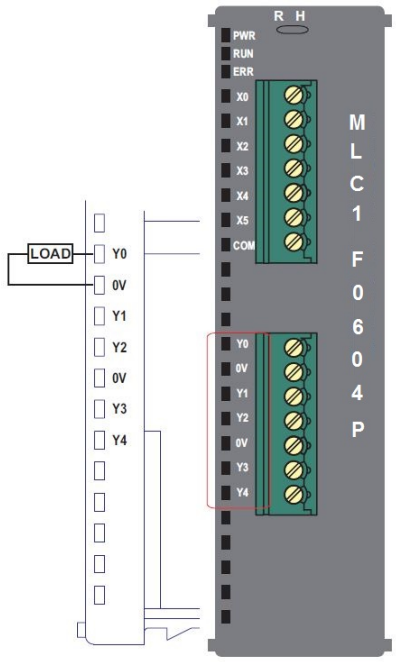

MLC1-F0808N (CPU w/ 8 Digital Input, 8 Sinking Output)

This non-expandable CPU module has eight bidirectional inputs and eight NPN digital outputs. Four of the inputs can be configured for two high-speed counters (HSC) using the MW registers. When used as HSCs, inputs X0 & X1 (channel 1) and X2 & X3 (channel 2/3) are used to record incoming pulses. Two of the outputs (Y0 and Y1) can be configured for Pulse Width Modulation (PWM).

The specification below provides information about the inputs/outputs only. For more information regarding communications ports, etc. consult the data sheet.

Specifications:

Power	24VDC, 300mA (+20%; -15%)
Approvals	CE, UL
Connection method	Removable terminal (3.81 mm pitch)
Hardware	
Memory	90 KB Application Memory, 198 KB Ladder Memory
Serial	1 RS232; 1 RS485 2W
USB Slave	Upload/download projects
Digital Inputs	8 bidirectional inputs (4 high-speed X0, X1, X2, and X3)
Rated input voltage	24 VDC
Rated input current	5mA (typical)
Input impedance	3K ohms
Minimum ON voltage	15 VDC
Maximum ON voltage	30 VDC
Minimum OFF voltage	-3 VDC
Maximum OFF voltage	5 VDC
Turn ON Time	10 msec
Turn OFF Time	10 msec
Isolation	Optically isolated from internal circuit

High-Speed Counter (HSC) Mode	
No. of inputs	2 channels (X0/X1, and X2/X3) in Single Phase Up Counter mode or in Quadrature 4X mode
Physical reset inputs	X4 (channel 1) and X5 (channel 2)
Configurable forced outputs (opt)	Y2 (channel 1) and Y3 (channel 2)
Maximum Input Frequency (per channel)	200 KHz
Maximum Input Count	4,294,967,295 (32-bit) with 1 count register and 1 preset register per channel
Digital Outputs	8 sinking outputs (NPN-type)
Output Capacity	300mA per output maximum
Rated load	300mA @ 30VDC
Nominal load	NPN: 80Ω 7.2W (resistive load)@24VDC 7.2VA (inductive load, Unity Power Factor)
Minimum ON voltage output	22VDC (measured across load)
Maximum ON voltage output	30VDC (measure across load)
Minimum OFF voltage output	0.2VDC
Maximum OFF voltage output	1VDC
Short Circuit Protection	Yes
Pulse Width Modulation (PWM) Mode	
No. of Outputs	2 [Y0 (channel 1) and Y1 (channel 2)]
PWM frequency (variable)	100 KHz maximum
General	
Operating Temperature	0 to 55°C
Operating Humidity	10% to 90% (non-condensing)
Mechanical Dimension (LxWxH)	3.94x1.02x2.76 inches [100x26x70mm]

Configuration:

Use MAPware-7000 to assign input (X and XW), output (Y and YW) and configuration (M and MW) memory addresses to the module.

Function	Register		Access
X0-X7 Digital Inputs	X00000-7 (XW0000)		Read Only
Y0-Y7 Digital Outputs	Y00000-7 (YW0000)		Read/Write
Single Phase Up/Down Option	**HSC Channel 1**	**HSC Channel 2/3**	
HSC Input Pin	X0	X2	Read Only
Direction Pin (Count Up if ON, Down if OFF)	X1	X3	Read Only
Quadrature Inputs	**Pair 1**	**Pair 2**	
Counter Inputs	X0, X1	X2, X3	Read Only
Physical reset inputs	X4	X5	Read Only
HSC Configuration Register	MW0010	MW0040	Read/Write
HSC Counter Register (Current Value)	MW0011	MW0041	Read/Write
HSC Preset Register	MW0013	MW0043	Read/Write
HSC Enable Bit	M00240	M00720	Read/Write
HSC Reset Bit	M00241	M00721	Read/Write
HSC Preset Reached Bit	M00242	M00722	Read Only
Output Flag	Y2	Y3	Read/Write
PWM Outputs	**Channel 1**	**Channel 2**	
Output	Y0	Y1	Read Only
PWM Configuration Register	MW0059	MW0075	Read/Write
Frequency Setting Register	MW0060	MW0076	Read/Write
ON Duty Setting Register (Duty Cycle)	MW0062	MW0078	Read/Write
Pulse Enable Flag	M00816	M00832	Read/Write
ON Duty Setting Error Flag	M00818	M00834	Read Only
Frequency Setting Error Flag	M00819	M00835	Read Only

Reference the table below when configuring each HSC Configuration Register (MW0010 or MW0040):

Input Mode	Output Mode	Register Value
Normal Input (HSC not enabled)	N/A	0
High-Speed Single Phase Counter, Up or Down based on Up/Down input	HW Done Bit Disabled	2
	HW Done output ON when preset is reached	258
	Done output ON when counter is enabled, OFF when preset is reached	770
Quadrature 4X	HW Done Bit Disabled	131
	HW Done output ON when preset is reached	387
	Done output ON when counter is enabled, OFF when preset is reached	899

Reference the table below when configuring the PWM Configuration Registers (MW0059 or MW0075):

Output Mode	Register Value
Normal PWM (fixed frequency)	1
Normal PWM (variable frequency)	2
CW/CCW (fixed frequency)	3
CW/CCW (variable frequency)	4
Pulse/Direction (fixed frequency)	7
Pulse/Direction (variable frequency)	8
Trapezoidal (Fixed Pulse Mode)	9

Wiring:

Bidirectional Inputs (normal) Note: X0, X1, X2, and X3 are high-speed	HSC: Single Phase Up
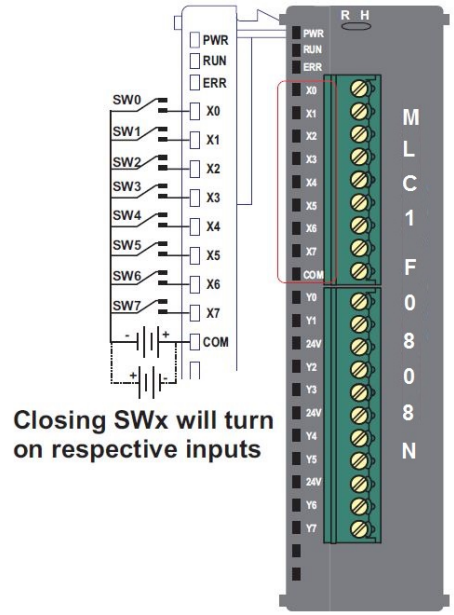	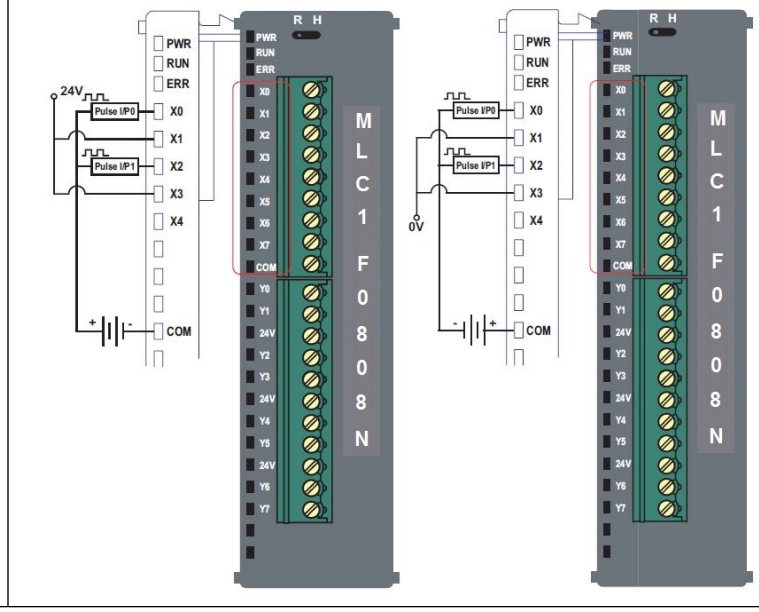

HSC: Quadrature mode	HSC: Single Phase Down
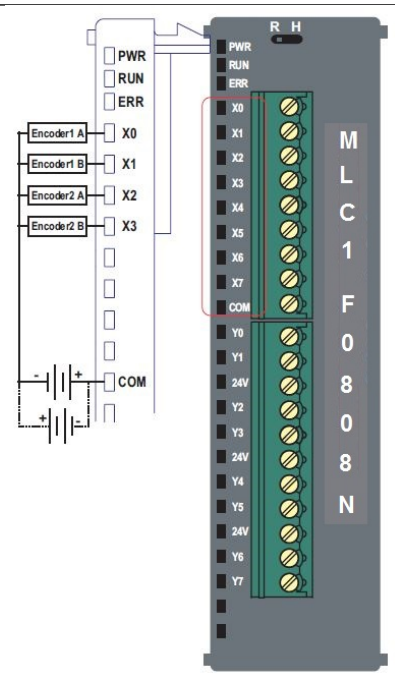	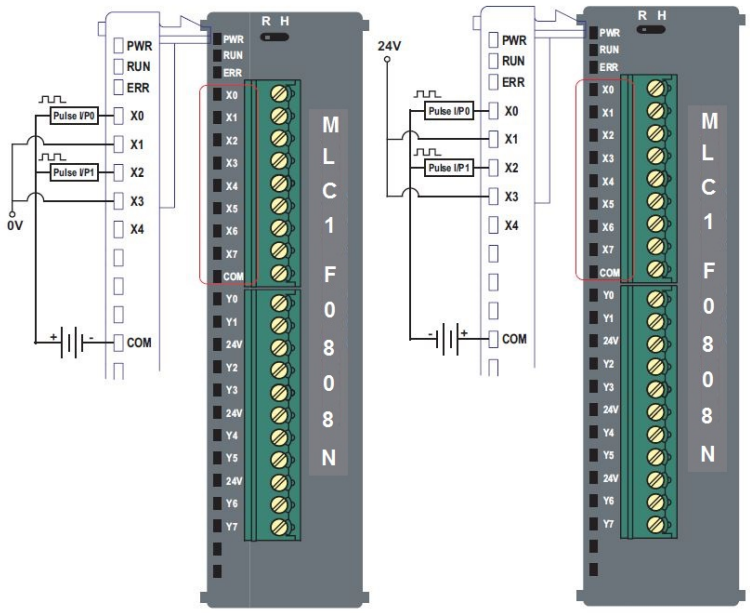
Digital Outputs (normal)	**Outputs (PWM mode)**
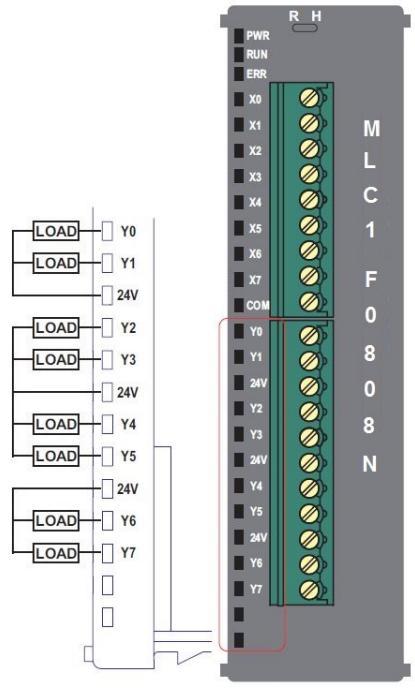	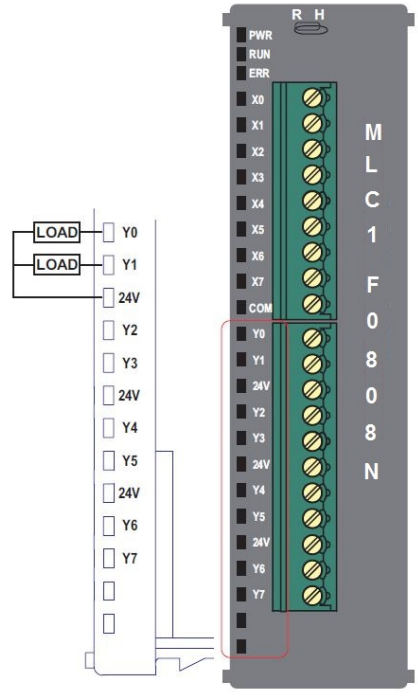

MLC1-F0808P (CPU w/ 8 Digital Input, 8 Sourcing Output)

This non-expandable CPU module has eight bidirectional inputs and eight PNP digital outputs. Four of the inputs can be configured for two high-speed counters (HSC) using the MW registers. When used as HSCs, inputs X0 & X1 (channel 1) and X2 & X3 (channel 2/3) are used to record incoming pulses. Two of the outputs (Y0 and Y1) can be configured for Pulse Width Modulation (PWM).

The specification below provides information about the inputs/outputs only. For more information regarding communications ports, etc. consult the data sheet.

Specifications:

Power	24VDC, 300mA (+20%; -15%)
Approvals	CE, UL
Connection method	Removable terminal (3.81 mm pitch)
Hardware	
Memory	90 KB Application Memory, 198 KB Ladder Memory
Serial	1 RS232; 1 RS485 2W
USB Slave	Upload/download projects
Digital Inputs	8 bidirectional inputs (4 high-speed X0, X1, X2, and X3)
Rated input voltage	24 VDC
Rated input current	5mA (typical)
Input impedance	3K ohms
Minimum ON voltage	15 VDC
Maximum ON voltage	30 VDC
Minimum OFF voltage	-3 VDC
Maximum OFF voltage	5 VDC
Turn ON Time	10 msec
Turn OFF Time	10 msec
Isolation	Optically isolated from internal circuit

High-Speed Counter (HSC) Mode	
No. of inputs	2 channels (X0/X1, and X2/X3) in Single Phase Up Counter mode or in Quadrature 4X mode
Physical reset inputs	X4 (channel 1) and X5 (channel 2)
Configurable forced outputs (opt)	Y2 (channel 1) and Y3 (channel 2)
Maximum Input Frequency (per channel)	200 KHz
Maximum Input Count	4,294,967,295 (32-bit) with 1 count register and 1 preset register per channel
Digital Outputs	8 sourcing outputs (PNP-type)
Output Capacity	250mA per output maximum
Rated load	250mA @ 30VDC
Nominal load	PNP: 96Ω 6W (resistive load)@24VDC 6VA (inductive load, Unity Power Factor)
Minimum ON voltage output	22VDC (measured across load)
Maximum ON voltage output	30VDC (measure across load)
Minimum OFF voltage output	0.2VDC
Maximum OFF voltage output	1VDC
Short Circuit Protection	Yes
Pulse Width Modulation (PWM) Mode	
No. of Outputs	2 [Y0 (channel 1) and Y1 (channel 2)]
PWM frequency (variable)	100 KHz maximum
General	
Operating Temperature	0 to 55°C
Operating Humidity	10% to 90% (non-condensing)
Mechanical Dimension (LxWxH)	3.94x1.02x2.76 inches [100x26x70mm]

Configuration:

Use MAPware-7000 to assign input (X and XW), output (Y and YW) and configuration (M and MW) memory addresses to the module.

Function	Register		Access
X0-X7 Digital Inputs	X00000-7 (XW0000)		Read Only
Y0-Y7 Digital Outputs	Y00000-7 (YW0000)		Read/Write
Single Phase Up/Down Option	**HSC Channel 1**	**HSC Channel 2/3**	
HSC Input Pin	X0	X2	Read Only
Direction Pin (Count Up if ON, Down if OFF)	X1	X3	Read Only
Quadrature Inputs	**Pair 1**	**Pair 2**	
Counter Inputs	X0, X1	X2, X3	Read Only
Physical reset inputs	X4	X5	Read Only
HSC Configuration Register	MW0010	MW0040	Read/Write
HSC Counter Register (Current Value)	MW0011	MW0041	Read/Write
HSC Preset Register	MW0013	MW0043	Read/Write
HSC Enable Bit	M00240	M00720	Read/Write
HSC Reset Bit	M00241	M00721	Read/Write
HSC Preset Reached Bit	M00242	M00722	Read Only
Output Flag	Y2	Y3	Read/Write
PWM Outputs	**Channel 1**	**Channel 2**	
Output	Y0	Y1	Read Only
PWM Configuration Register	MW0059	MW0075	Read/Write
Frequency Setting Register	MW0060	MW0076	Read/Write
ON Duty Setting Register (Duty Cycle)	MW0062	MW0078	Read/Write
Pulse Enable Flag	M00816	M00832	Read/Write
ON Duty Setting Error Flag	M00818	M00834	Read Only
Frequency Setting Error Flag	M00819	M00835	Read Only

Reference the table below when configuring each HSC Configuration Register (MW0010 or MW0040):

Input Mode	Output Mode	Register Value
Normal Input (HSC not enabled)	N/A	0
High-Speed Single Phase Counter, Up or Down based on Up/Down input	HW Done Bit Disabled	2
	HW Done output ON when preset is reached	258
	Done output ON when counter is enabled, OFF when preset is reached	770
Quadrature 4X	HW Done Bit Disabled	131
	HW Done output ON when preset is reached	387
	Done output ON when counter is enabled, OFF when preset is reached	899

Reference the table below when configuring the PWM Configuration Registers (MW0059 or MW0075):

Output Mode	Register Value
Normal PWM (fixed frequency)	1
Normal PWM (variable frequency)	2
CW/CCW (fixed frequency)	3
CW/CCW (variable frequency)	4
Pulse/Direction (fixed frequency)	7
Pulse/Direction (variable frequency)	8
Trapezoidal (Fixed Pulse Mode)	9

Wiring:

Bidirectional Inputs (normal) Note: X0, X1, X2, and X3 are high-speed	HSC: Single Phase Up
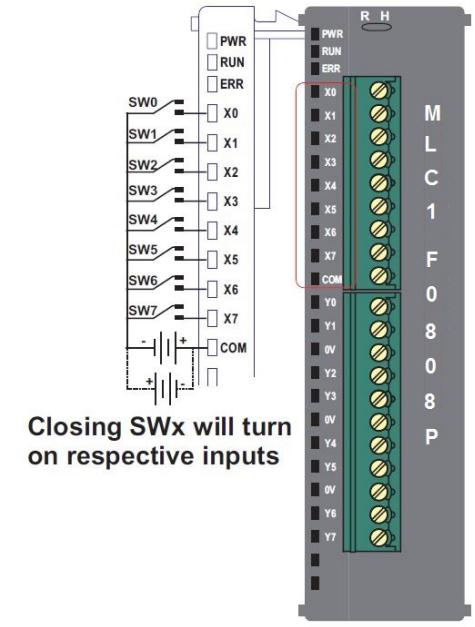	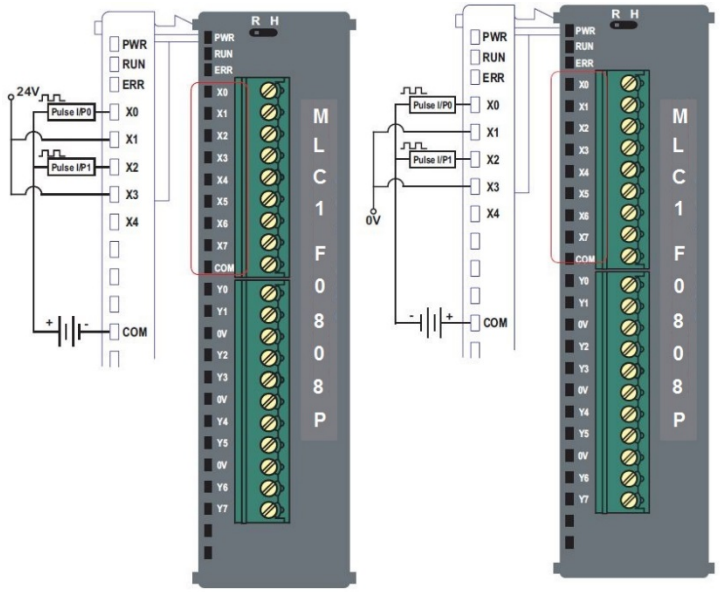

HSC: Quadrature mode	HSC: Single Phase Down
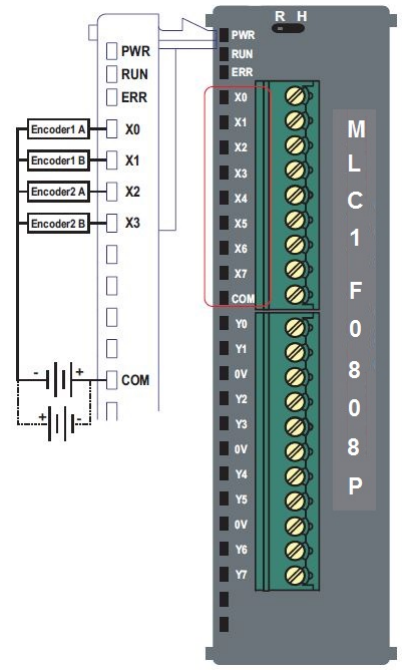	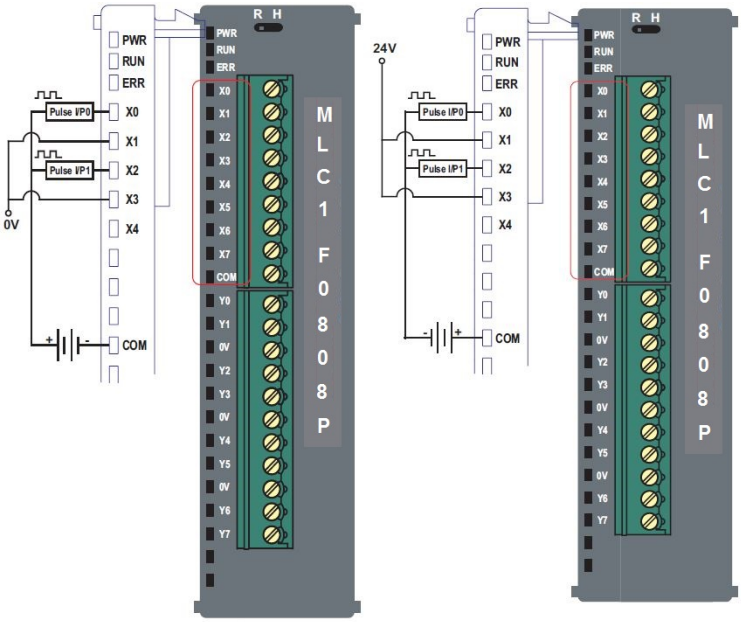
Digital Outputs (normal)	**Outputs (PWM mode)**
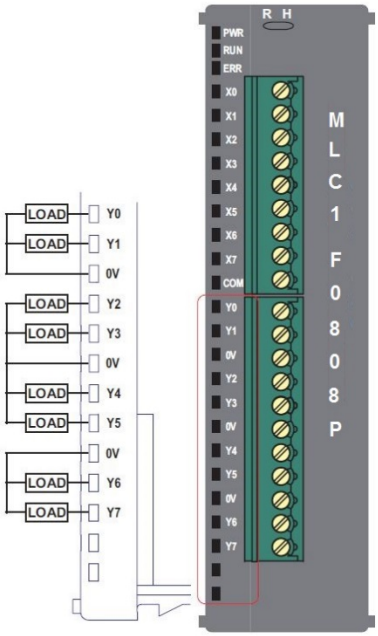	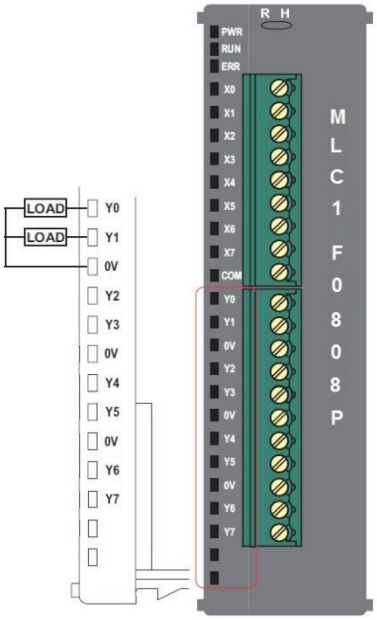

MLC1-F0808Y (CPU w/ 8 Digital Input, 6 Relay & 2 Sourcing Output)

This non-expandable CPU module has eight bidirectional inputs, six relay and two PNP digital outputs. Four of the inputs can be configured for two high-speed counters (HSC) using the MW registers. When used as HSCs, inputs X0 & X1 (channel 1) and X2 & X3 (channel 2/3) are used to record incoming pulses. The two PNP outputs (Y0 and Y1) can be configured for Pulse Width Modulation (PWM).

The specification below provides information about the inputs/outputs only. For more information regarding communications ports, etc. consult the data sheet.

Specifications:

Power	24VDC, 300mA (+20%; -15%)
Approvals	CE, UL
Connection method	Removable terminal (3.81 mm pitch)
Hardware	
Memory	90 KB Application Memory, 198 KB Ladder Memory
Serial	1 RS232; 1 RS485 2W
USB Slave	Upload/download projects
Digital Inputs	8 bidirectional inputs (4 high-speed X0, X1, X2, and X3)
Rated input voltage	24 VDC
Rated input current	5mA (typical)
Input impedance	3K ohms
Minimum ON voltage	15 VDC
Maximum ON voltage	30 VDC
Minimum OFF voltage	-3 VDC
Maximum OFF voltage	5 VDC
Turn ON Time	10 msec
Turn OFF Time	10 msec
Isolation	Optically isolated from internal circuit

High-Speed Counter (HSC) Mode	
No. of inputs	2 channels (X0/X1, and X2/X3) in Single Phase Up Counter mode or in Quadrature 4X mode
Physical reset inputs	X4 (channel 1) and X5 (channel 2)
Configurable forced outputs (opt)	Y2 (channel 1) and Y3 (channel 2)
Maximum Input Frequency (per channel)	200 KHz
Maximum Input Count	4,294,967,295 (32-bit) with 1 count register and 1 preset register per channel
Digital Outputs	6 relay, 2 sourcing outputs (PNP-type)
Output Capacity	250mA per output maximum
Rated load	250mA @ 30VDC
Nominal load	Relays: DC load: 12Ω 48W (resistive load)@24VDC 48VA (inductive load, UPF[Unity Power Factor]) AC load: 115Ω 460W (resistive load)@230VAC 460VA (inductive load, UPF) PNP: 96Ω 6W (resistive load)@24VDC 6VA (inductive load, UPF)
Minimum ON voltage output	22VDC (measured across load)
Maximum ON voltage output	30VDC (measure across load)
Minimum OFF voltage output	0.2VDC
Maximum OFF voltage output	1VDC
Short Circuit Protection	Yes
Pulse Width Modulation (PWM) Mode	
No. of Outputs	2 [Y0 (channel 1) and Y1 (channel 2)]
PWM frequency (variable)	100 KHz maximum
General	
Operating Temperature	0 to 55°C
Operating Humidity	10% to 90% (non-condensing)
Mechanical Dimension (LxWxH)	3.94x1.02x2.76 inches [100x26x70mm]

Configuration:

Use MAPware-7000 to assign input (X and XW), output (Y and YW) and configuration (M and MW) memory addresses to the module.

Function	Register		Access
X0-X7 Digital Inputs	X00000-7 (XW0000)		Read Only
Y0-Y7 Digital Outputs	Y00000-7 (YW0000)		Read/Write
Single Phase Up/Down Option	**HSC Channel 1**	**HSC Channel 2/3**	
HSC Input Pin	X0	X2	Read Only
Direction Pin (Count Up if ON, Down if OFF)	X1	X3	Read Only
Quadrature Inputs	**Pair 1**	**Pair 2**	
Counter Inputs	X0, X1	X2, X3	Read Only
Physical reset inputs	X4	X5	Read Only
HSC Configuration Register	MW0010	MW0040	Read/Write
HSC Counter Register (Current Value)	MW0011	MW0041	Read/Write
HSC Preset Register	MW0013	MW0043	Read/Write
HSC Enable Bit	M00240	M00720	Read/Write
HSC Reset Bit	M00241	M00721	Read/Write
HSC Preset Reached Bit	M00242	M00722	Read Only
Output Flag	Y2	Y3	Read/Write
PWM Outputs	**Channel 1**	**Channel 2**	
Output	Y0	Y1	Read Only
PWM Configuration Register	MW0059	MW0075	Read/Write
Frequency Setting Register	MW0060	MW0076	Read/Write
ON Duty Setting Register (Duty Cycle)	MW0062	MW0078	Read/Write
Pulse Enable Flag	M00816	M00832	Read/Write
ON Duty Setting Error Flag	M00818	M00834	Read Only
Frequency Setting Error Flag	M00819	M00835	Read Only

Reference the table below when configuring each HSC Configuration Register (MW0010 or MW0040):

Input Mode	Output Mode	Register Value
Normal Input (HSC not enabled)	N/A	0
High-Speed Single Phase Counter, Up or Down based on Up/Down input	HW Done Bit Disabled	2
	HW Done output ON when preset is reached	258
	Done output ON when counter is enabled, OFF when preset is reached	770
Quadrature 4X	HW Done Bit Disabled	131
	HW Done output ON when preset is reached	387
	Done output ON when counter is enabled, OFF when preset is reached	899

Reference the table below when configuring the PWM Configuration Registers (MW0059 or MW0075):

Output Mode	Register Value
Normal PWM (fixed frequency)	1
Normal PWM (variable frequency)	2
CW/CCW (fixed frequency)	3
CW/CCW (variable frequency)	4
Pulse/Direction (fixed frequency)	7
Pulse/Direction (variable frequency)	8
Trapezoidal (Fixed Pulse Mode)	9

Wiring:

Bidirectional Inputs (normal) Note: X0, X1, X2, and X3 are high-speed	HSC: Single Phase Up
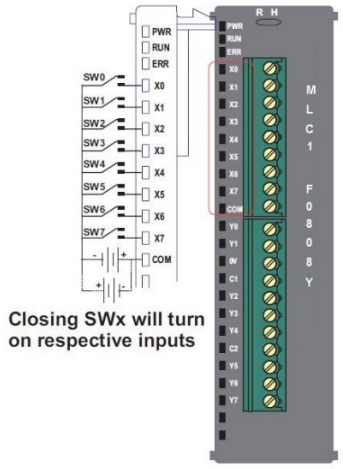	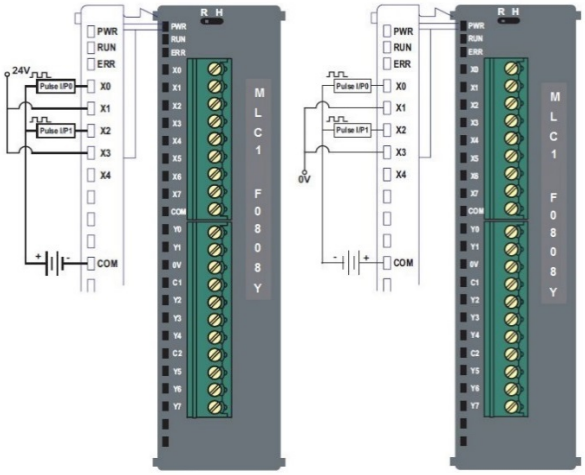

HSC: Quadrature mode	HSC: Single Phase Down
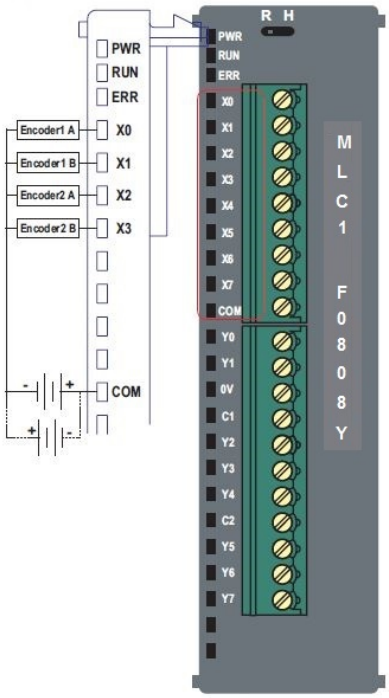	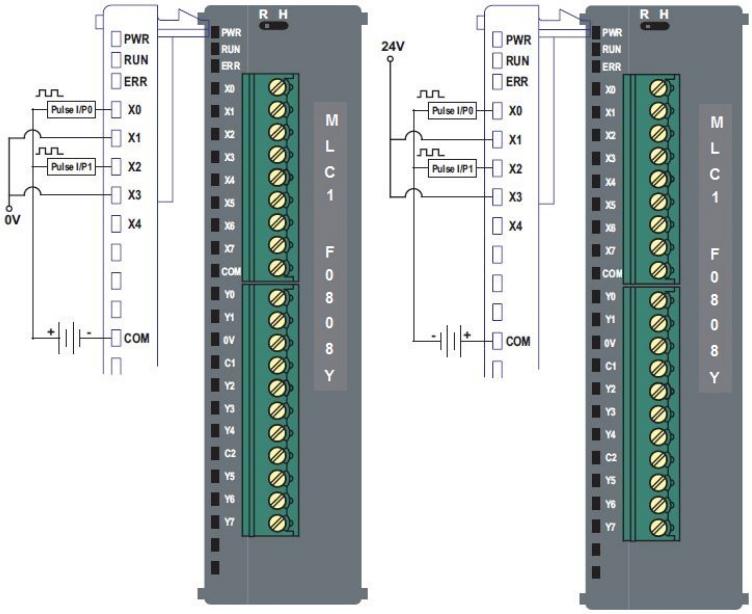
Digital Outputs Note: PWM mode use outputs Y0, Y1	
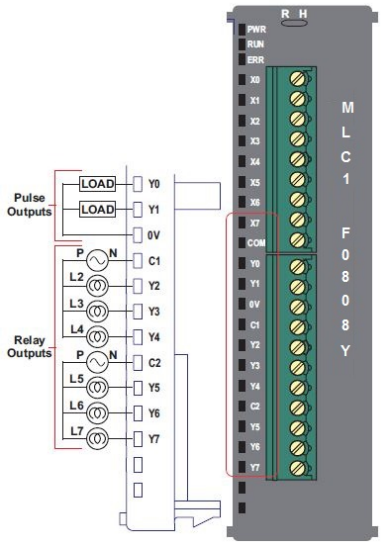	

MLC1-F0808N0201 (CPU w/ 8 Digital Input, 8 Sinking Output, 2 Analog Input, 1 Analog Output)

This non-expandable CPU module has eight bidirectional inputs, eight NPN digital outputs, two analog inputs, and one analog output. Four of the digital inputs can be configured for two high-speed counters (HSC) using the MW registers. When used as HSCs, inputs X0 & X1 (channel 1) and X2 & X3 (channel 2/3) are used to record incoming pulses. Two of the digital outputs (Y0 and Y1) can be configured for Pulse Width Modulation (PWM). The two analog inputs support voltage or current mode and the analog output supports 4-20mA current mode.

The specification below provides information about the inputs/outputs only. For more information regarding communications ports, etc. consult the data sheet.

Specifications:

Power	24VDC, 300mA (+20%; -15%)
Approvals	CE, UL
Connection method	Removable terminal (3.81 mm pitch)
Hardware	
Memory	90 KB Application Memory, 198 KB Ladder Memory
Serial	1 RS232; 1 RS485 2W
USB Slave	Upload/download projects
Digital Inputs	8 bidirectional inputs (4 high-speed X0, X1, X2, and X3)
Rated input voltage	24 VDC
Rated input current	5mA (typical)
Input impedance	3K ohms
Minimum ON voltage	15 VDC
Maximum ON voltage	30 VDC
Minimum OFF voltage	-3 VDC
Maximum OFF voltage	5 VDC
Turn ON Time	10 msec
Turn OFF Time	10 msec
Isolation	Optically isolated from internal circuit

High-Speed Counter (HSC) Mode	
No. of inputs	2 channels (X0/X1, and X2/X3) in Single Phase Up Counter mode or in Quadrature 4X mode
Physical reset inputs	X4 (channel 1) and X5 (channel 2)
Configurable forced outputs (opt)	Y2 (channel 1) and Y3 (channel 2)
Maximum Input Frequency (per channel)	200 KHz
Maximum Input Count	4,294,967,295 (32-bit) with 1 count register and 1 preset register per channel
Digital Outputs	8 sinking outputs (NPN-type)
Output Capacity	300mA per output maximum
Rated load	300mA @ 30VDC
Nominal load	NPN: 80Ω 7.2W (resistive load)@24VDC 7.2VA (inductive load, Unity Power Factor)
Minimum ON voltage output	22VDC (measured across load)
Maximum ON voltage output	30VDC (measure across load)
Minimum OFF voltage output	0.2VDC
Maximum OFF voltage output	1VDC
Short Circuit Protection	Yes
Pulse Width Modulation (PWM) Mode	
No. of Outputs	2 [Y0 (channel 1) and Y1 (channel 2)]
PWM frequency (variable)	100 KHz maximum
Analog Inputs	2 Inputs: • Voltage mode (0-10V, 0-5V) • Current mode (0-20mA, 4-20mA)
Resolution	16-bit
Accuracy	0.2% of full scale@25°C
Voltage Mode	
Input Range	0 to 10V, 0-5V
Input Impedance	1MΩ
Conversion cycle time (all channels)	760 msec. for 0-10V, 0-5V 670 msec. for 0-100mV, 0-50mV
Current Mode	
Input Range	0-20mA, 4-20mA
Input Impedance	100Ω

Conversion cycle time (all channels)	670 msec.
Analog Outputs	1 Output: • Current mode (4 to 20mA)
Resolution	12-bit
Accuracy	0.2% of full scale@25°C
Current Mode	
Output Range	4-20mA
Load Requirements	500Ω maximum
General	
Operating Temperature	0 to 55°C
Operating Humidity	10% to 90% (non-condensing)
Mechanical Dimension (LxWxH)	3.94x1.02x2.76 inches [100x26x70mm]

Configuration:

Use MAPware-7000 to assign input (X and XW), output (Y and YW) and configuration (M and MW) memory addresses to the module.

Function	Register		Access
X0-X7 Digital Inputs	X00000-7 (XW0000)		Read Only
Y0-Y7 Digital Outputs	Y00000-7 (YW0000)		Read/Write
Single Phase Up/Down Option	**HSC Channel 1**	**HSC Channel 2/3**	
HSC Input Pin	X0	X2	Read Only
Direction Pin (Count Up if ON, Down if OFF)	X1	X3	Read Only
Quadrature Inputs	**Pair 1**	**Pair 2**	
Counter Inputs	X0, X1	X2, X3	Read Only
Physical reset inputs	X4	X5	Read Only
HSC Configuration Register	MW0010	MW0040	Read/Write
HSC Counter Register (Current Value)	MW0011	MW0041	Read/Write
HSC Preset Register	MW0013	MW0043	Read/Write
HSC Enable Bit	M00240	M00720	Read/Write
HSC Reset Bit	M00241	M00721	Read/Write
HSC Preset Reached Bit	M00242	M00722	Read Only
Output Flag	Y2	Y3	Read/Write
PWM Outputs	**Channel 1**	**Channel 2**	
Output	Y0	Y1	Read Only
PWM Configuration Register	MW0059	MW0075	Read/Write
Frequency Setting Register	MW0060	MW0076	Read/Write
ON Duty Setting Register (Duty Cycle)	MW0062	MW0078	Read/Write
Pulse Enable Flag	M00816	M00832	Read/Write
ON Duty Setting Error Flag	M00818	M00834	Read Only
Frequency Setting Error Flag	M00819	M00835	Read Only
Analog Inputs	**Register**		
Input Channel 0 Data	XW0001		Read Only
Input Channel 1 Data	XW0003		Read Only
Input Channel 0 Config Register	MW0071		Read/Write
Input Channel 1 Config Register	MW0072		Read/Write
Analog Outputs	**Register**		
Output Channel 0 Data (Current)	YW0002		Read/Write
Output Channel 0 Config Register	MW0073		Read/Write

Reference the table below when configuring each HSC Configuration Register (MW0010 or MW0040):

Input Mode	Output Mode	Register Value
Normal Input (HSC not enabled)	N/A	0
High-Speed Single-Phase Counter, Up or Down based on Up/Down input	HW Done Bit Disabled	2
	HW Done output ON when preset is reached	258
	Done output ON when counter is enabled, OFF when preset is reached	770
Quadrature 4X	HW Done Bit Disabled	131
	HW Done output ON when preset is reached	387
	Done output ON when counter is enabled, OFF when preset is reached	899

Reference the table below when configuring the PWM Configuration Registers (MW0059 or MW0075):

Output Mode	Register Value
Normal PWM (fixed frequency)	1
Normal PWM (variable frequency)	2
CW/CCW (fixed frequency)	3
CW/CCW (variable frequency)	4
Pulse/Direction (fixed frequency)	7
Pulse/Direction (variable frequency)	8
Trapezoidal (Fixed Pulse Mode)	9

Reference the tables below when configuring each Analog Input (MW0071 or MW0072) and Output Configuration Register (MW0073):

Input Signal Type	Register Value
Voltage, 0 to 10V	1
Voltage, 0 to 5V	6
Current, 4 to 20mA	2
Current, 0 to 20mA	3

Output Signal Type	Register Value
Current, 4 to 20mA	5

The values in the appropriate analog input register range from 0-64000, with over and under indications at 65000 and 65001, while analog output register values range from 0-4095.

Reg Value	Input Values			
	0 to 20mA	4 to 20mA	0 to 10V	0 to 5V
0	0mA	4mA	0V	0V
16000	5mA	8mA	2.5V	1.25V
32000	10mA	12mA	5V	2.5V
48000	15mA	16mA	7.5V	3.75V
64000	20mA	20mA	10V	5V
65000	< 0mA	< 4mA	< 0V	< 0V
65001	> 20mA	> 20mA	> 10V	> 5V

Reg Value	Output Values
	4 to 20mA
0	4mA
1024	8mA
2048	12mA
3072	16mA
4095	20mA

Wiring:

Bidirectional Inputs (normal)
Note: X0, X1, X2, and X3 are high-speed

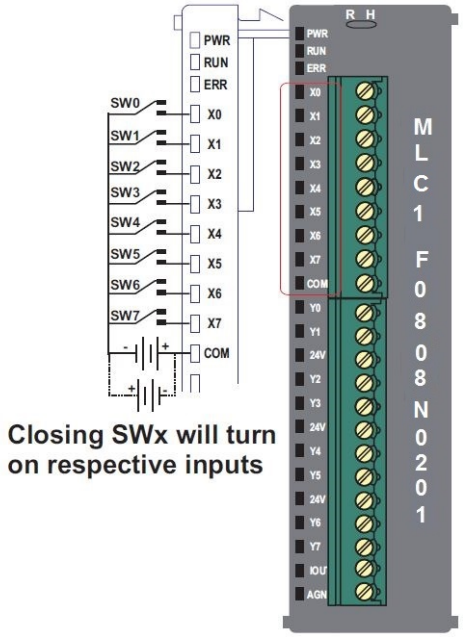

HSC: Single Phase Up

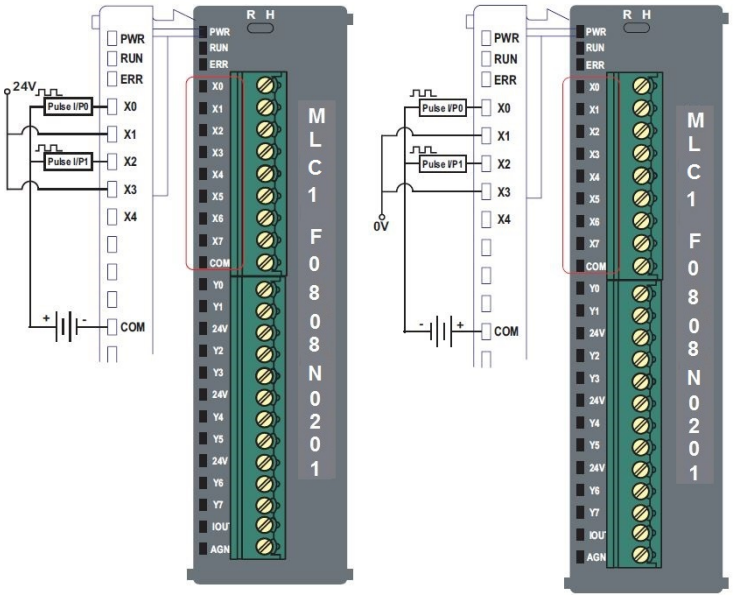

HSC: Quadrature mode

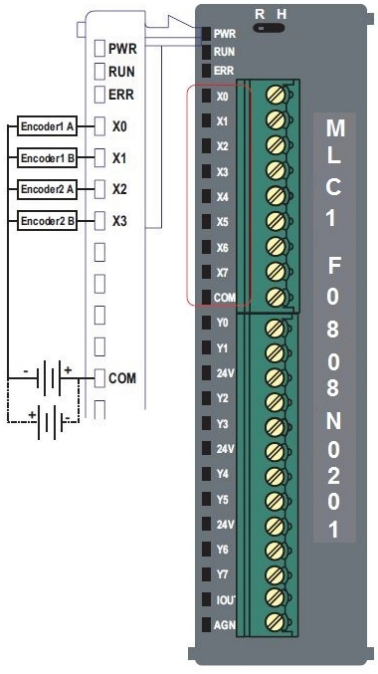

HSC: Single Phase Down

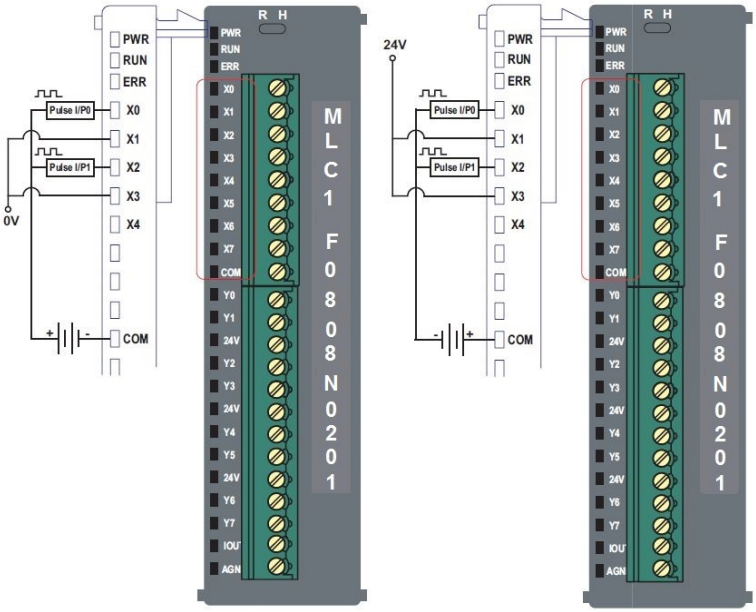

Digital Outputs (normal) Note: PWM mode use outputs Y0, Y1	Analog Output (current)
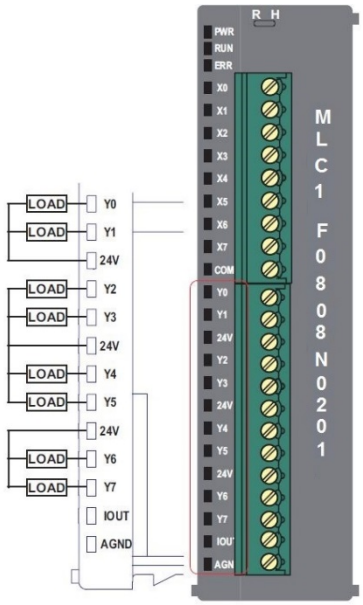	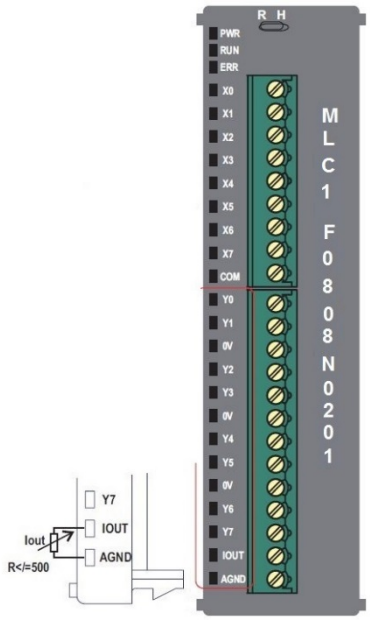
Analog Inputs (voltage)	Analog Inputs (current)
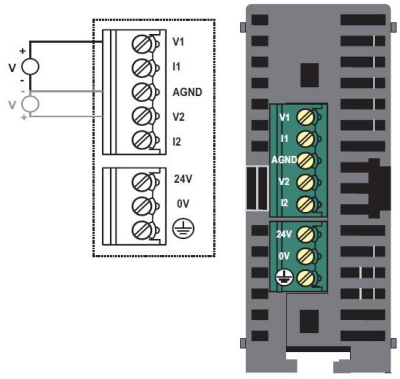	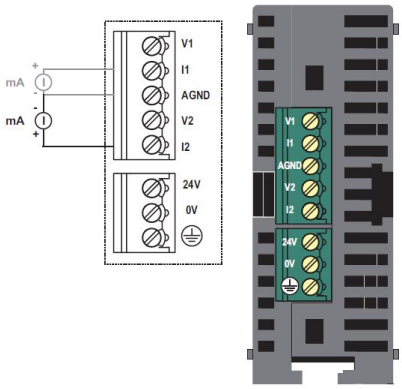

MLC1-F0808P0201 (CPU w/ 8 Digital Input, 8 Sourcing Output, 2 Analog Input, 1 Analog Output)

This non-expandable CPU module has eight bidirectional inputs, eight PNP digital outputs, two analog inputs, and one analog output. Four of the digital inputs can be configured for two high-speed counters (HSC) using the MW registers. When used as HSCs, inputs X0 & X1 (channel 1) and X2 & X3 (channel 2/3) are used to record incoming pulses. Two of the digital outputs (Y0 and Y1) can be configured for Pulse Width Modulation (PWM). The two analog inputs support voltage or current mode and the analog output supports 4-20mA current mode.

The specification below provides information about the inputs/outputs only. For more information regarding communications ports, etc. consult the data sheet.

Specifications:

Power	24VDC, 300mA (+20%; -15%)
Approvals	CE, UL
Connection method	Removable terminal (3.81 mm pitch)
Hardware	
Memory	90 KB Application Memory, 198 KB Ladder Memory
Serial	1 RS232; 1 RS485 2W
USB Slave	Upload/download projects
Digital Inputs	8 bidirectional inputs (4 high-speed X0, X1, X2, and X3)
Rated input voltage	24 VDC
Rated input current	5mA (typical)
Input impedance	3K ohms
Minimum ON voltage	15 VDC
Maximum ON voltage	30 VDC
Minimum OFF voltage	-3 VDC
Maximum OFF voltage	5 VDC
Turn ON Time	10 msec
Turn OFF Time	10 msec
Isolation	Optically isolated from internal circuit

High-Speed Counter (HSC) Mode	
No. of inputs	2 channels (X0/X1, and X2/X3) in Single Phase Up Counter mode or in Quadrature 4X mode
Physical reset inputs	X4 (channel 1) and X5 (channel 2)
Configurable forced outputs (opt)	Y2 (channel 1) and Y3 (channel 2)
Maximum Input Frequency (per channel)	200 KHz
Maximum Input Count	4,294,967,295 (32-bit) with 1 count register and 1 preset register per channel
Digital Outputs	8 sourcing outputs (PNP-type)
Output Capacity	250mA per output maximum
Rated load	250mA @ 30VDC
Nominal load	PNP: 96Ω 6W (resistive load)@24VDC 6VA (inductive load, UPF)
Minimum ON voltage output	22VDC (measured across load)
Maximum ON voltage output	30VDC (measure across load)
Minimum OFF voltage output	0.2VDC
Maximum OFF voltage output	1VDC
Short Circuit Protection	Yes
Pulse Width Modulation (PWM) Mode	
No. of Outputs	2 [Y0 (channel 1) and Y1 (channel 2)]
PWM frequency (variable)	100 KHz maximum
Analog Inputs	2 Inputs: • Voltage mode (0-10V, 0-5V) • Current mode (0-20mA, 4-20mA)
Resolution	16-bit
Accuracy	0.2% of full scale@25°C
Voltage Mode	
Input Range	0 to 10V, 0-5V
Input Impedance	1MΩ
Conversion cycle time (all channels)	760 msec. for 0-10V, 0-5V 670 msec. for 0-100mV, 0-50mV
Current Mode	
Input Range	0-20mA, 4-20mA
Input Impedance	100Ω

Conversion cycle time (all channels)	670 msec.
Analog Outputs	1 Output: • Current mode (4 to 20mA)
Resolution	12-bit
Accuracy	0.2% of full scale@25°C
Current Mode	
Output Range	4-20mA
Load Requirements	500Ω maximum
General	
Operating Temperature	0 to 55°C
Operating Humidity	10% to 90% (non-condensing)
Mechanical Dimension (LxWxH)	3.94x1.02x2.76 inches [100x26x70mm]

Configuration:

Use MAPware-7000 to assign input (X and XW), output (Y and YW) and configuration (M and MW) memory addresses to the module.

Function	Register		Access
X0-X7 Digital Inputs	X00000-7 (XW0000)		Read Only
Y0-Y7 Digital Outputs	Y00000-7 (YW0000)		Read/Write
Single Phase Up/Down Option	**HSC Channel 1**	**HSC Channel 2/3**	
HSC Input Pin	X0	X2	Read Only
Direction Pin (Count Up if ON, Down if OFF)	X1	X3	Read Only
Quadrature Inputs	**Pair 1**	**Pair 2**	
Counter Inputs	X0, X1	X2, X3	Read Only
Physical reset inputs	X4	X5	Read Only
HSC Configuration Register	MW0010	MW0040	Read/Write
HSC Counter Register (Current Value)	MW0011	MW0041	Read/Write
HSC Preset Register	MW0013	MW0043	Read/Write
HSC Enable Bit	M00240	M00720	Read/Write
HSC Reset Bit	M00241	M00721	Read/Write
HSC Preset Reached Bit	M00242	M00722	Read Only
Output Flag	Y2	Y3	Read/Write
PWM Outputs	**Channel 1**	**Channel 2**	
Output	Y0	Y1	Read Only
PWM Configuration Register	MW0059	MW0075	Read/Write
Frequency Setting Register	MW0060	MW0076	Read/Write
ON Duty Setting Register (Duty Cycle)	MW0062	MW0078	Read/Write
Pulse Enable Flag	M00816	M00832	Read/Write
ON Duty Setting Error Flag	M00818	M00834	Read Only
Frequency Setting Error Flag	M00819	M00835	Read Only
Analog Inputs	**Register**		
Input Channel 0 Data	XW0001		Read Only
Input Channel 1 Data	XW0003		Read Only
Input Channel 0 Config Register	MW0071		Read/Write
Input Channel 1 Config Register	MW0072		Read/Write
Analog Outputs	**Register**		
Output Channel 0 Data (Current)	YW0002		Read/Write
Output Channel 0 Config Register	MW0073		Read/Write

Reference the table below when configuring each HSC Configuration Register (MW0010 or MW0040):

Input Mode	Output Mode	Register Value
Normal Input (HSC not enabled)	N/A	0
High-Speed Single-Phase Counter, Up or Down based on Up/Down input	HW Done Bit Disabled	2
	HW Done output ON when preset is reached	258
	Done output ON when counter is enabled, OFF when preset is reached	770
Quadrature 4X	HW Done Bit Disabled	131
	HW Done output ON when preset is reached	387
	Done output ON when counter is enabled, OFF when preset is reached	899

Reference the table below when configuring the PWM Configuration Registers (MW0059 or MW0075):

Output Mode	Register Value
Normal PWM (fixed frequency)	1
Normal PWM (variable frequency)	2
CW/CCW (fixed frequency)	3
CW/CCW (variable frequency)	4
Pulse/Direction (fixed frequency)	7
Pulse/Direction (variable frequency)	8
Trapezoidal (Fixed Pulse Mode)	9

Reference the tables below when configuring each Analog Input (MW0071 or MW0072) and Output Configuration Register (MW0073):

Input Signal Type	Register Value
Voltage, 0 to 10V	1
Voltage, 0 to 5V	6
Current, 4 to 20mA	2
Current, 0 to 20mA	3

Output Signal Type	Register Value
Current, 4 to 20mA	5

The values in the appropriate analog input register range from 0-64000, with over and under indications at 65000 and 65001, while analog output register values range from 0-4095.

Reg Value	Input Values			
	0 to 20mA	4 to 20mA	0 to 10V	0 to 5V
0	0mA	4mA	0V	0V
16000	5mA	8mA	2.5V	1.25V
32000	10mA	12mA	5V	2.5V
48000	15mA	16mA	7.5V	3.75V
64000	20mA	20mA	10V	5V
65000	< 0mA	< 4mA	< 0V	< 0V
65001	> 20mA	> 20mA	> 10V	> 5V

Reg Value	Output Values
	4 to 20mA
0	4mA
1024	8mA
2048	12mA
3072	16mA
4095	20mA

Wiring:

Bidirectional Inputs (normal)
Note: X0, X1, X2, and X3 are high-speed

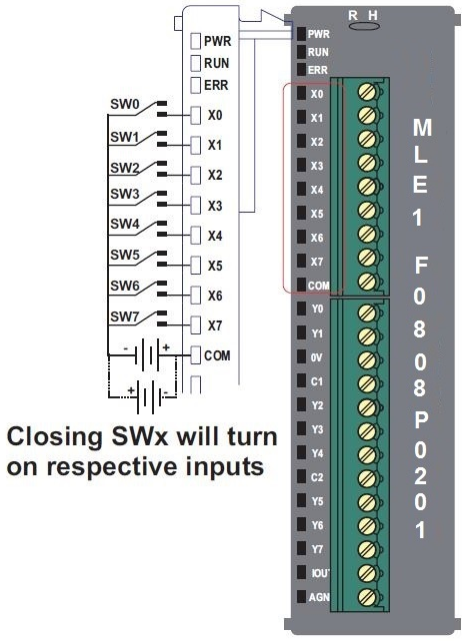

HSC: Single Phase Up

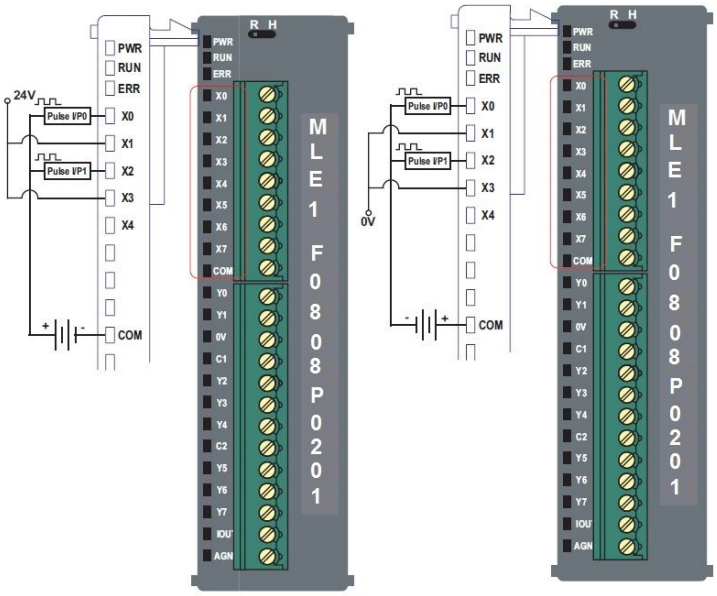

HSC: Quadrature mode

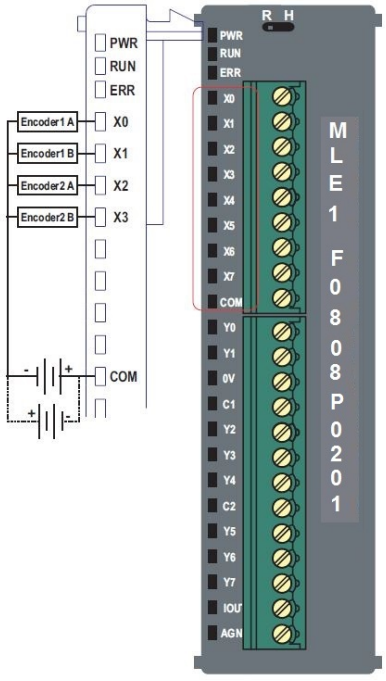

HSC: Single Phase Down

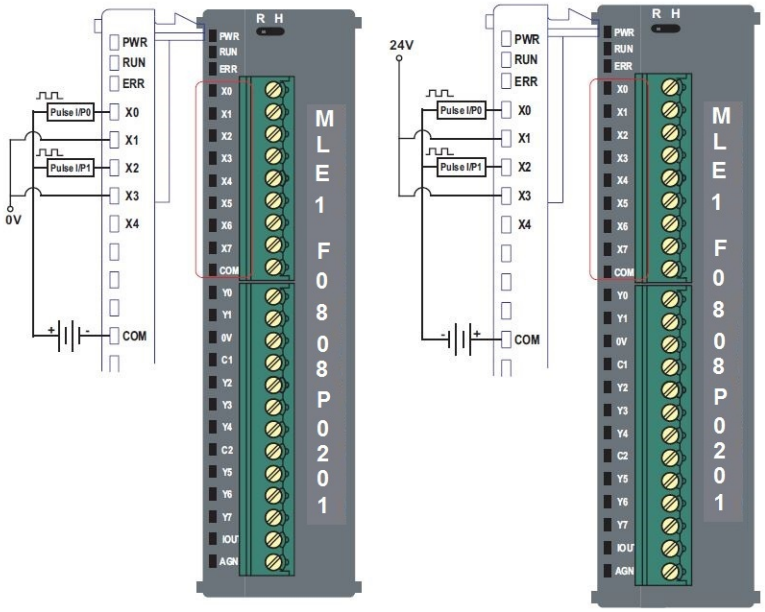

Digital Outputs (normal) Note: PWM mode use outputs Y0, Y1	Analog Output (current)
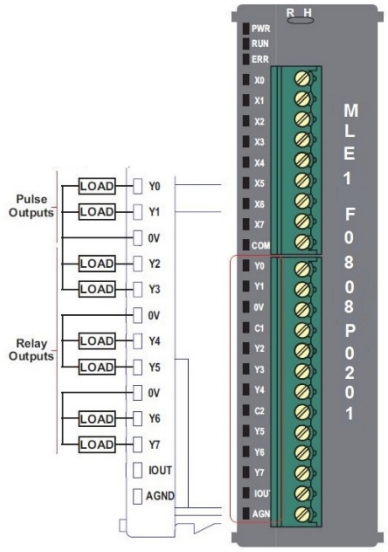	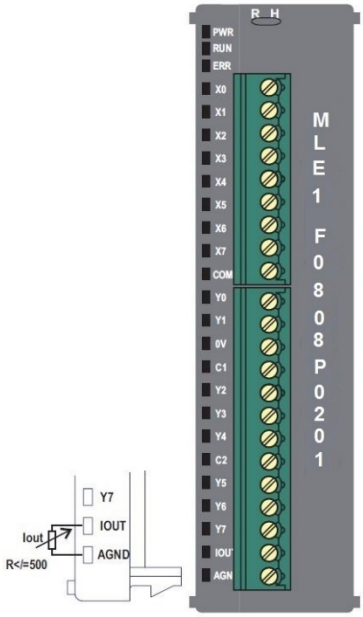
Analog Inputs (voltage)	Analog Inputs (current)
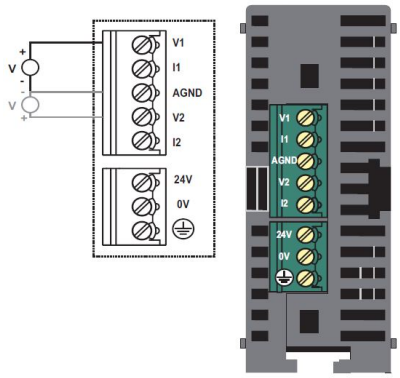	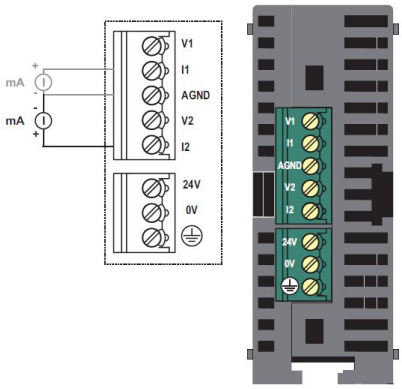

MLC1-F0808Y0201 (CPU w/ 8 Digital Input, 6 Relay & 2 Sourcing Output, 2 Analog Input, 1 Analog Output)

This non-expandable CPU module has eight bidirectional inputs, six relay and two PNP digital outputs, two analog inputs, and one analog output. Four of the digital inputs can be configured for two high-speed counters (HSC) using the MW registers. When used as HSCs, inputs X0 & X1 (channel 1) and X2 & X3 (channel 2/3) are used to record incoming pulses. The two PNP outputs (Y0 and Y1) can be configured for Pulse Width Modulation (PWM). The two analog inputs support voltage or current mode and the analog output supports 4-20mA current mode.

The specification below provides information about the inputs/outputs only. For more information regarding communications ports, etc. consult the data sheet.

Specifications:

Power	24VDC, 300mA (+20%; -15%)
Approvals	CE, UL
Connection method	Removable terminal (3.81 mm pitch)
Hardware	
Memory	90 KB Application Memory, 198 KB Ladder Memory
Serial	1 RS232; 1 RS485 2W
USB Slave	Upload/download projects
Digital Inputs	8 bidirectional inputs (4 high-speed X0, X1, X2, and X3)
Rated input voltage	24 VDC
Rated input current	5mA (typical)
Input impedance	3K ohms
Minimum ON voltage	15 VDC
Maximum ON voltage	30 VDC
Minimum OFF voltage	-3 VDC
Maximum OFF voltage	5 VDC
Turn ON Time	10 msec
Turn OFF Time	10 msec
Isolation	Optically isolated from internal circuit

High-Speed Counter (HSC) Mode	
No. of inputs	2 channels (X0/X1, and X2/X3) in Single Phase Up Counter mode or in Quadrature 4X mode
Physical reset inputs	X4 (channel 1) and X5 (channel 2)
Configurable forced outputs (opt)	Y2 (channel 1) and Y3 (channel 2)
Maximum Input Frequency (per channel)	200 KHz
Maximum Input Count	4,294,967,295 (32-bit) with 1 count register and 1 preset register per channel
Digital Outputs	6 relay, 2 sourcing outputs (PNP-type)
Output Capacity	250mA per output maximum
Rated load	250mA @ 30VDC
Nominal load	Relays: DC load: 12Ω 48W (resistive load)@24VDC 48VA (inductive load, UPF[Unity Power Factor]) AC load: 115Ω 460W (resistive load)@230VAC 460VA (inductive load, UPF) PNP: 96Ω 6W (resistive load)@24VDC 6VA (inductive load, UPF)
Minimum ON voltage output	22VDC (measured across load)
Maximum ON voltage output	30VDC (measure across load)
Minimum OFF voltage output	0.2VDC
Maximum OFF voltage output	1VDC
Short Circuit Protection	Yes
Pulse Width Modulation (PWM) Mode	
No. of Outputs	2 [Y0 (channel 1) and Y1 (channel 2)]
PWM frequency (variable)	100 KHz maximum
Analog Inputs	2 Inputs: • Voltage mode (0-10V, 0-5V) • Current mode (0-20mA, 4-20mA)
Resolution	16-bit
Accuracy	0.2% of full scale@25°C
Voltage Mode	
Input Range	0 to 10V, 0-5V
Input Impedance	1MΩ
Conversion cycle time (all channels)	760 msec. for 0-10V, 0-5V

	670 msec. for 0-100mV, 0-50mV
Current Mode	
Input Range	0-20mA, 4-20mA
Input Impedance	100Ω
Conversion cycle time (all channels)	670 msec.
Analog Outputs	1 Output: • Current mode (4 to 20mA)
Resolution	12-bit
Accuracy	0.2% of full scale@25°C
Current Mode	
Output Range	4-20mA
Load Requirements	500Ω maximum
General	
Operating Temperature	0 to 55°C
Operating Humidity	10% to 90% (non-condensing)
Mechanical Dimension (LxWxH)	3.94x1.02x2.76 inches [100x26x70mm]

Configuration:

Use MAPware-7000 to assign input (X and XW), output (Y and YW) and configuration (M and MW) memory addresses to the module.

Function	Register		Access
X0-X7 Digital Inputs	X00000-7 (XW0000)		Read Only
Y0-Y7 Digital Outputs	Y00000-7 (YW0000)		Read/Write
Single Phase Up/Down Option	**HSC Channel 1**	**HSC Channel 2/3**	
HSC Input Pin	X0	X2	Read Only
Direction Pin (Count Up if ON, Down if OFF)	X1	X3	Read Only
Quadrature Inputs	**Pair 1**	**Pair 2**	
Counter Inputs	X0, X1	X2, X3	Read Only
Physical reset inputs	X4	X5	Read Only
HSC Configuration Register	MW0010	MW0040	Read/Write
HSC Counter Register (Current Value)	MW0011	MW0041	Read/Write
HSC Preset Register	MW0013	MW0043	Read/Write
HSC Enable Bit	M00240	M00720	Read/Write
HSC Reset Bit	M00241	M00721	Read/Write
HSC Preset Reached Bit	M00242	M00722	Read Only
Output Flag	Y2	Y3	Read/Write
PWM Outputs	**Channel 1**	**Channel 2**	
Output	Y0	Y1	Read Only
PWM Configuration Register	MW0059	MW0075	Read/Write
Frequency Setting Register	MW0060	MW0076	Read/Write
ON Duty Setting Register (Duty Cycle)	MW0062	MW0078	Read/Write
Pulse Enable Flag	M00816	M00832	Read/Write
ON Duty Setting Error Flag	M00818	M00834	Read Only
Frequency Setting Error Flag	M00819	M00835	Read Only
Analog Inputs	**Register**		
Input Channel 0 Data	XW0001		Read Only
Input Channel 1 Data	XW0003		Read Only
Input Channel 0 Config Register	MW0071		Read/Write
Input Channel 1 Config Register	MW0072		Read/Write
Analog Outputs	**Register**		
Output Channel 0 Data (Current)	YW0002		Read/Write
Output Channel 0 Config Register	MW0073		Read/Write

Reference the table below when configuring each HSC Configuration Register (MW0010 or MW0040):

Input Mode	Output Mode	Register Value
Normal Input (HSC not enabled)	N/A	0
High-Speed Single-Phase Counter, Up or Down based on Up/Down input	HW Done Bit Disabled	2
	HW Done output ON when preset is reached	258
	Done output ON when counter is enabled, OFF when preset is reached	770
Quadrature 4X	HW Done Bit Disabled	131
	HW Done output ON when preset is reached	387
	Done output ON when counter is enabled, OFF when preset is reached	899

Reference the table below when configuring the PWM Configuration Registers (MW0059 or MW0075):

Output Mode	Register Value
Normal PWM (fixed frequency)	1
Normal PWM (variable frequency)	2
CW/CCW (fixed frequency)	3
CW/CCW (variable frequency)	4
Pulse/Direction (fixed frequency)	7
Pulse/Direction (variable frequency)	8
Trapezoidal (Fixed Pulse Mode)	9

Reference the tables below when configuring each Analog Input (MW0071 or MW0072) and Output Configuration Register (MW0073):

Input Signal Type	Register Value
Voltage, 0 to 10V	1
Voltage, 0 to 5V	6
Current, 4 to 20mA	2
Current, 0 to 20mA	3

Output Signal Type	Register Value
Current, 4 to 20mA	5

The values in the appropriate analog input register range from 0-64000, with over and under indications at 65000 and 65001, while analog output register values range from 0-4095.

Reg Value	Input Values			
	0 to 20mA	4 to 20mA	0 to 10V	0 to 5V
0	0mA	4mA	0V	0V
16000	5mA	8mA	2.5V	1.25V
32000	10mA	12mA	5V	2.5V
48000	15mA	16mA	7.5V	3.75V
64000	20mA	20mA	10V	5V
65000	< 0mA	< 4mA	< 0V	< 0V
65001	> 20mA	> 20mA	> 10V	> 5V

Reg Value	Output Values
	4 to 20mA
0	4mA
1024	8mA
2048	12mA
3072	16mA
4095	20mA

Wiring:

<table>
<tr><td>Bidirectional Inputs (normal)
Note: X0, X1, X2, and X3 are high-speed</td><td>HSC: Single Phase Up</td></tr>
<tr><td> 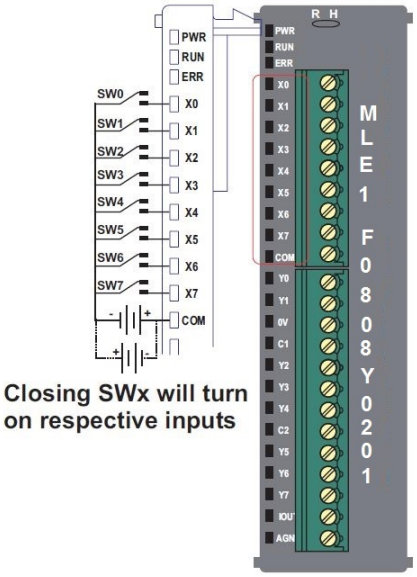
</td><td> 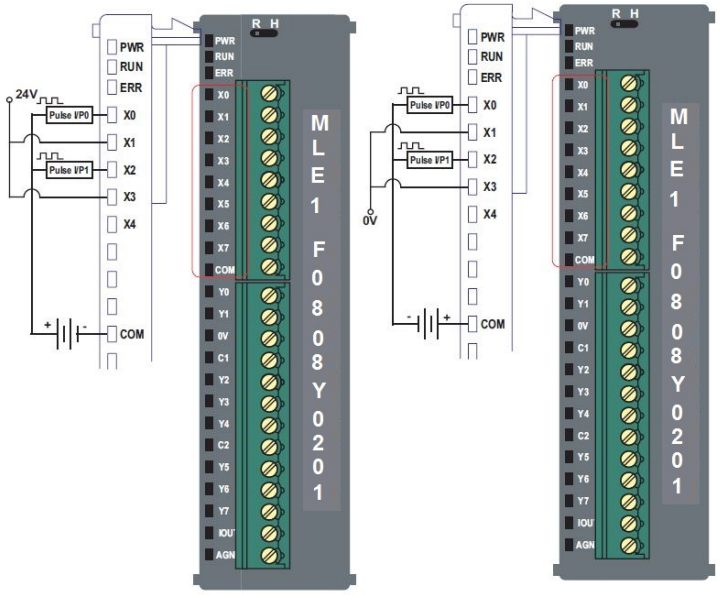
</td></tr>
<tr><td>HSC: Quadrature mode</td><td>HSC: Single Phase Down</td></tr>
<tr><td> 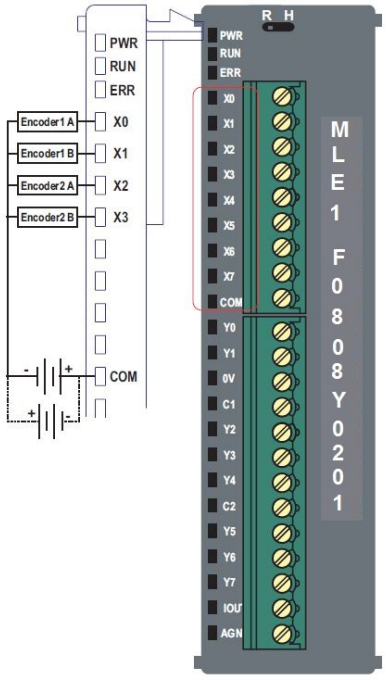
</td><td> 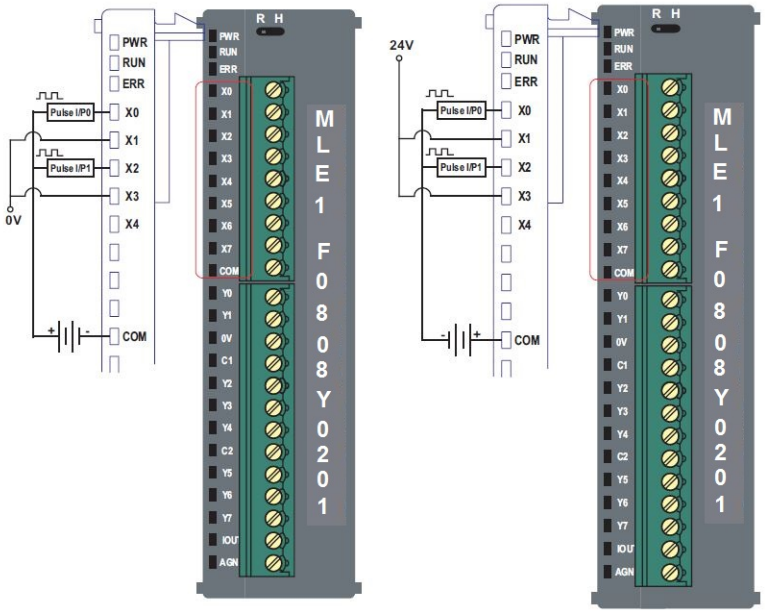
</td></tr>
</table>

Digital Outputs (normal) Note: PWM mode use outputs Y0, Y1	Analog Output (current)
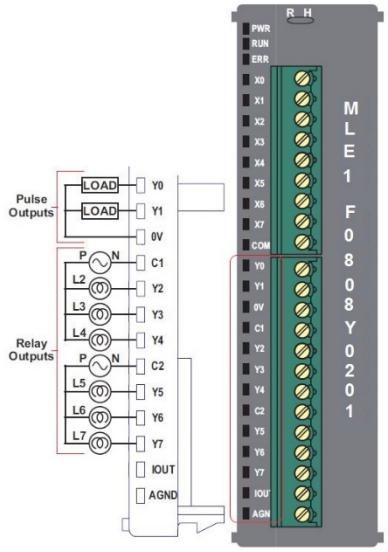	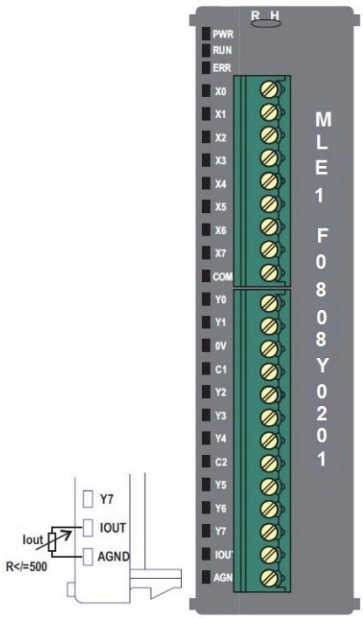
Analog Inputs (voltage)	Analog Inputs (current)
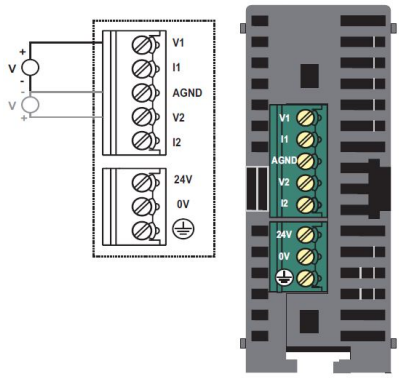	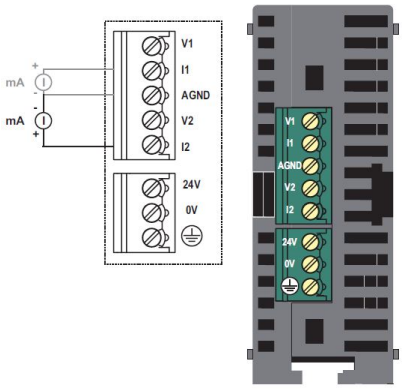

MLC1-F1616P0201 (CPU w/ 16 Digital Input, 16 Sourcing Output, 2 Analog Input, 1 Analog Output)

This non-expandable CPU module has sixteen bidirectional inputs, sixteen PNP digital outputs, two analog inputs, and one analog output. Four of the digital inputs can be configured for two high-speed counters (HSC) using the MW registers. When used as HSCs, inputs X0 & X1 (channel 1) and X2 & X3 (channel 2/3) are used to record incoming pulses. Two of the digital outputs (Y0 and Y1) can be configured for Pulse Width Modulation (PWM). The two analog inputs support voltage or current mode and the analog output supports 0-10V voltage or 4-20mA current mode.

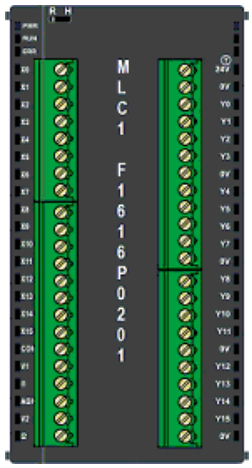

The specification below provides information about the inputs/outputs only. For more information regarding communications ports, etc. consult the data sheet.

Specifications:

Power	24VDC, 500mA (+20%; -15%)
Approvals	CE, UL
Connection method	Removable terminal (3.81 mm pitch)
Hardware	
Memory	90 KB Application Memory, 178 KB Ladder Memory
Serial	1 RS232; 1 RS485 2W
USB Slave	Upload/download projects
Digital Inputs	16 bidirectional inputs (4 high-speed X0, X1, X2, and X3)
Rated input voltage	24 VDC
Rated input current	5mA (typical)
Input impedance	3K ohms
Minimum ON voltage	15 VDC
Maximum ON voltage	30 VDC
Minimum OFF voltage	-3 VDC
Maximum OFF voltage	5 VDC
Turn ON Time	10 msec
Turn OFF Time	10 msec
Isolation	Optically isolated from internal circuit

High-Speed Counter (HSC) Mode	
No. of inputs	2 channels (X0/X1, and X2/X3) in Single Phase Up Counter mode or in Quadrature 4X mode
Physical reset inputs	X4 (channel 1) and X5 (channel 2)
Configurable forced outputs (opt)	Y2 (channel 1) and Y3 (channel 2)
Maximum Input Frequency (per channel)	200 KHz
Maximum Input Count	4,294,967,295 (32-bit) with 1 count register and 1 preset register per channel
Digital Outputs	16 sourcing outputs (PNP-type)
Output Capacity	250mA per output maximum
Rated load	250mA @ 30VDC
Nominal load	PNP: 96Ω 6W (resistive load)@24VDC 6VA (inductive load, UPF)
Minimum ON voltage output	22VDC (measured across load)
Maximum ON voltage output	30VDC (measure across load)
Minimum OFF voltage output	0.2VDC
Maximum OFF voltage output	1VDC
Short Circuit Protection	Yes
Pulse Width Modulation (PWM) Mode	
No. of Outputs	2 [Y0 (channel 1) and Y1 (channel 2)]
PWM frequency (variable)	200 KHz maximum
Analog Inputs	2 Inputs: • Voltage mode (0-10V, 0-5V) • Current mode (0-20mA, 4-20mA)
Resolution	16-bit
Accuracy	0.2% of full scale@25°C
Voltage Mode	
Input Range	0 to 10V, 0-5V
Input Impedance	1MΩ
Conversion cycle time (all channels)	760 msec. for 0-10V, 0-5V 670 msec. for 0-100mV, 0-50mV
Current Mode	
Input Range	0-20mA, 4-20mA
Input Impedance	100Ω

Conversion cycle time (all channels)	670 msec.
Analog Outputs	2 Outputs: • Voltage mode (0-10V) • Current mode (4 to 20mA)
Resolution	12-bit
Accuracy	0.2% of full scale@25°C
Voltage Mode	
Output Range	0 to 10VDC
Load Requirements	1000Ω minimum
Current Mode	
Output Range	4-20mA
Load Requirements	500Ω maximum
General	
Operating Temperature	0 to 55°C
Operating Humidity	10% to 90% (non-condensing)
Mechanical Dimension (LxWxH)	3.94x1.02x2.76 inches [100x26x70mm]

Configuration:

Use MAPware-7000 to assign input (X and XW), output (Y and YW) and configuration (M and MW) memory addresses to the module.

Function	Register		Access
X0-X15 Digital Inputs	X00000-15 (XW0000)		Read Only
Y0-Y15 Digital Outputs	Y00000-15 (YW0000)		Read/Write
Single Phase Up/Down Option	**HSC Channel 1**	**HSC Channel 2/3**	
HSC Input Pin	X0	X2	Read Only
Direction Pin (Count Up if ON, Down if OFF)	X1	X3	Read Only
Quadrature Inputs	**Pair 1**	**Pair 2**	
Counter Inputs	X0, X1	X2, X3	Read Only
Physical reset inputs	X4	X5	Read Only
HSC Configuration Register	MW0010	MW0040	Read/Write
HSC Counter Register (Current Value)	MW0011	MW0041	Read/Write
HSC Preset Register	MW0013	MW0043	Read/Write
HSC Enable Bit	M00240	M00720	Read/Write
HSC Reset Bit	M00241	M00721	Read/Write
HSC Preset Reached Bit	M00242	M00722	Read Only
Output Flag	Y2	Y3	Read/Write
PWM Outputs	**Channel 1**	**Channel 2**	
Output	Y0	Y1	Read Only
PWM Configuration Register	MW0059	MW0075	Read/Write
Frequency Setting Register	MW0060	MW0076	Read/Write
ON Duty Setting Register (Duty Cycle)	MW0062	MW0078	Read/Write
Pulse Enable Flag	M00816	M00832	Read/Write
ON Duty Setting Error Flag	M00818	M00834	Read Only
Frequency Setting Error Flag	M00819	M00835	Read Only
Analog Inputs	**Register**		
Input Channel 0 Data	XW0001		Read Only
Input Channel 1 Data	XW0003		Read Only
Input Channel 0 Config Register	MW0071		Read/Write
Input Channel 1 Config Register	MW0072		Read/Write
Analog Outputs	**Register**		
Output Channel 0 Data (Voltage)	YW0001		Read/Write
Output Channel 0 Data (Current)	YW0002		Read/Write
Output Channel 0 Config Register	MW0073		Read/Write

Reference the table below when configuring each HSC Configuration Register (MW0010 or MW0040):

Input Mode	Output Mode	Register Value
Normal Input (HSC not enabled)	N/A	0
High-Speed Single-Phase Counter, Up or Down based on Up/Down input	HW Done Bit Disabled	2
	HW Done output ON when preset is reached	258
	Done output ON when counter is enabled, OFF when preset is reached	770
Quadrature 4X	HW Done Bit Disabled	131
	HW Done output ON when preset is reached	387
	Done output ON when counter is enabled, OFF when preset is reached	899

Reference the table below when configuring the PWM Configuration Registers (MW0059 or MW0075):

Output Mode	Register Value
Normal PWM (fixed frequency)	1
Normal PWM (variable frequency)	2
CW/CCW (fixed frequency)	3
CW/CCW (variable frequency)	4
Pulse/Direction (fixed frequency)	7
Pulse/Direction (variable frequency)	8
Trapezoidal (Fixed Pulse Mode)	9

Reference the tables below when configuring each Analog Input (MW0071 or MW0072) and Output Configuration Register (MW0073):

Input Signal Type	Register Value
Voltage, 0 to 10V	1
Voltage, 0 to 5V	6
Current, 4 to 20mA	2
Current, 0 to 20mA	3

Output Signal Type	Register Value
Voltage, 0 to 10V	2
Current, 4 to 20mA	5

The values in the appropriate analog input register range from 0-64000, with over and under indications at 65000 and 65001, while analog output register values range from 0-4095.

Reg Value	Input Values			
	0 to 20mA	4 to 20mA	0 to 10V	0 to 5V
0	0mA	4mA	0V	0V
16000	5mA	8mA	2.5V	1.25V
32000	10mA	12mA	5V	2.5V
48000	15mA	16mA	7.5V	3.75V
64000	20mA	20mA	10V	5V
65000	< 0mA	< 4mA	< 0V	< 0V
65001	> 20mA	> 20mA	> 10V	> 5V

Reg Value	Output Values	
	0 to 10V	4 to 20mA
0	0	4mA
1024	2.5V	8mA
2048	5V	12mA
3072	7.5V	16mA
4095	10V	20mA

Wiring:

Bidirectional Inputs (normal) Note: X0, X1, X2, and X3 are high-speed	HSC: Single Phase Up
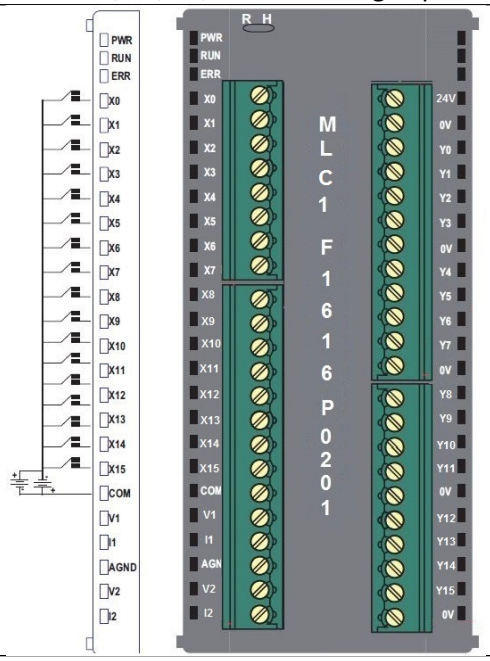	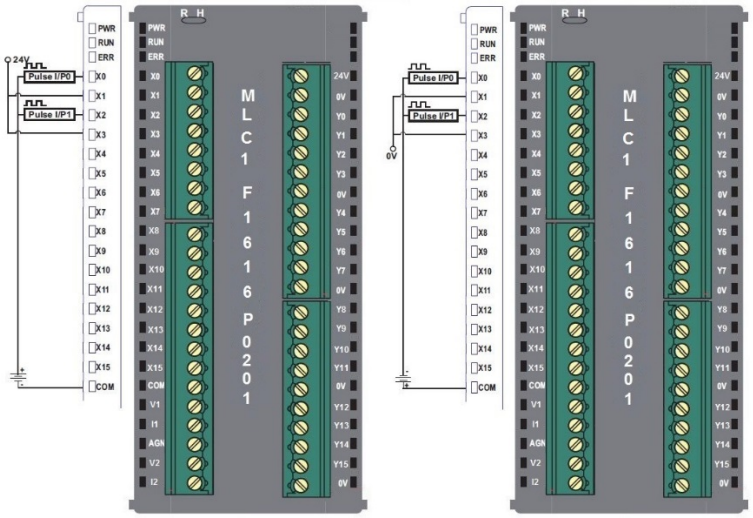
HSC: Quadrature mode	HSC: Single Phase Down
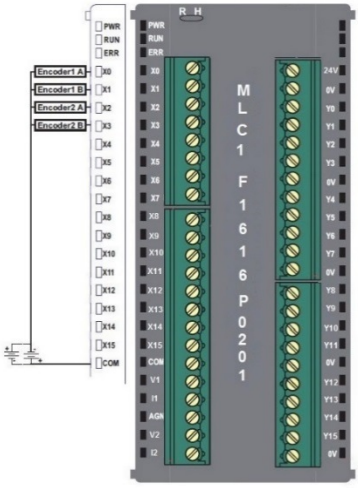	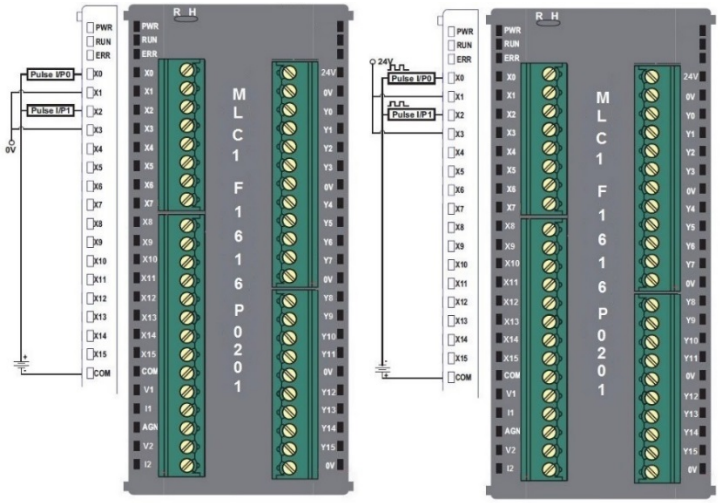

Digital Outputs (normal) Note: PWM mode use outputs Y0, Y1

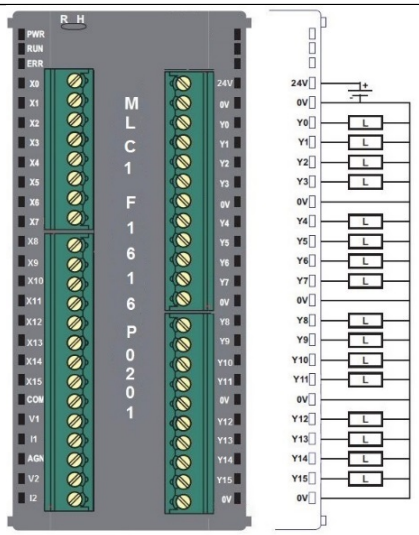

Analog Inputs (voltage)	Analog Inputs (current)
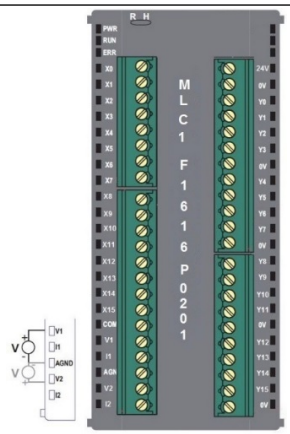	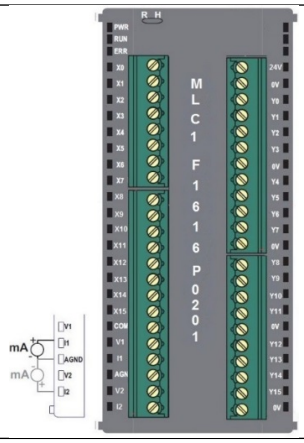

Analog Outputs (voltage)	Analog Outputs (current)
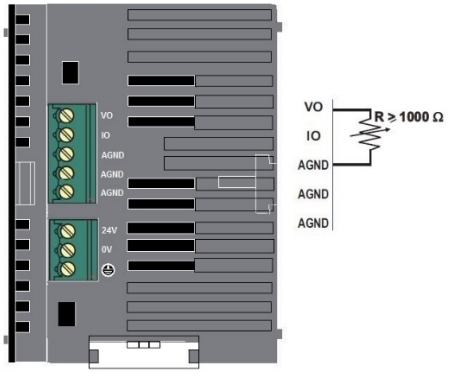	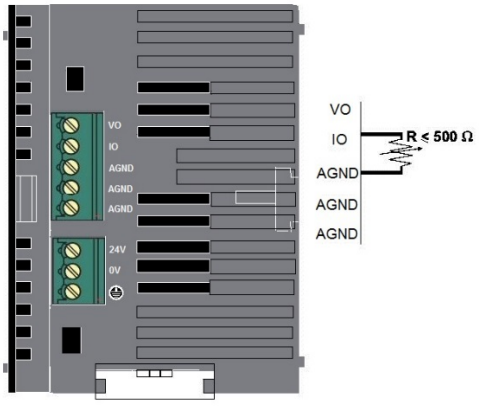

EX-Series Expandable CPU Base Units

MLC1-E1616P (CPU w/ 16 Digital Input, 16 Sourcing Output)

This expandable CPU module has sixteen bidirectional inputs, and sixteen PNP digital outputs. Four of the digital inputs can be configured for two high-speed counters (HSC) using the MW registers. When used as HSCs, inputs X0 & X1 (channel 1) and X2 & X3 (channel 2/3) are used to record incoming pulses. Two of the digital outputs (Y0 and Y1) can be configured for Pulse Width Modulation (PWM).

Up to sixteen MLE I/O expansion modules can be added to this CPU module.

The specification below provides information about the inputs/outputs only. For more information regarding communications ports, etc. consult the data sheet.

Specifications:

Power	24VDC, 400mA (+20%; -15%)
Approvals	CE, UL
Connection method	Removable terminal (3.81 mm pitch)
Hardware	
Memory	90 KB Application Memory, 178 KB Ladder Memory
Serial	1 RS232; 1 RS485 2W
USB Slave	Upload/download projects
Digital Inputs	16 bidirectional inputs (4 high-speed X0, X1, X2, and X3)
Rated input voltage	24 VDC
Rated input current	5mA (typical)
Input impedance	3K ohms
Minimum ON voltage	15 VDC
Maximum ON voltage	30 VDC
Minimum OFF voltage	-3 VDC
Maximum OFF voltage	5 VDC
Turn ON Time	10 msec
Turn OFF Time	10 msec
Isolation	Optically isolated from internal circuit
High-Speed Counter (HSC) Mode	

No. of inputs	2 channels (X0/X1, and X2/X3) in Single Phase Up Counter mode or in Quadrature 4X mode
Physical reset inputs	X4 (channel 1) and X5 (channel 2)
Configurable forced outputs (opt)	Y2 (channel 1) and Y3 (channel 2)
Maximum Input Frequency (per channel)	200 KHz
Maximum Input Count	4,294,967,295 (32-bit) with 1 count register and 1 preset register per channel
Digital Outputs	16 sourcing outputs (PNP-type)
Output Capacity	250mA per output maximum
Rated load	250mA @ 30VDC
Nominal load	PNP: 96Ω 6W (resistive load)@24VDC 6VA (inductive load, Unity Power Factor)
Minimum ON voltage output	22VDC (measured across load)
Maximum ON voltage output	30VDC (measure across load)
Minimum OFF voltage output	0.2VDC
Maximum OFF voltage output	1VDC
Short Circuit Protection	Yes
Pulse Width Modulation (PWM) Mode	
No. of Outputs	2 [Y0 (channel 1) and Y1 (channel 2)]
PWM frequency (variable)	200 KHz maximum
General	
Operating Temperature	0 to 55°C
Operating Humidity	10% to 90% (non-condensing)
Mechanical Dimension (LxWxH)	3.94x2.05x2.76 inches [100x52x70mm]

Configuration:

Use MAPware-7000 to assign input (X and XW), output (Y and YW) and configuration (M and MW) memory addresses to the module.

Function	Register		Access
X0-X15 Digital Inputs	X00000-15 (XW0000)		Read Only
Y0-Y15 Digital Outputs	Y00000-15 (YW0000)		Read/Write
Single Phase Up/Down Option	**HSC Channel 1**	**HSC Channel 2/3**	
HSC Input Pin	X0	X2	Read Only
Direction Pin (Count Up if ON, Down if OFF)	X1	X3	Read Only
Quadrature Inputs	**Pair 1**	**Pair 2**	
Counter Inputs	X0, X1	X2, X3	Read Only
Physical reset inputs	X4	X5	Read Only
HSC Configuration Register	MW0010	MW0040	Read/Write
HSC Counter Register (Current Value)	MW0011	MW0041	Read/Write
HSC Preset Register	MW0013	MW0043	Read/Write
HSC Enable Bit	M00240	M00720	Read/Write
HSC Reset Bit	M00241	M00721	Read/Write
HSC Preset Reached Bit	M00242	M00722	Read Only
Output Flag	Y2	Y3	Read/Write
PWM Outputs	**Channel 1**	**Channel 2**	
Output	Y0	Y1	Read Only
PWM Configuration Register	MW0059	MW0075	Read/Write
Frequency Setting Register	MW0060	MW0076	Read/Write
ON Duty Setting Register (Duty Cycle)	MW0062	MW0078	Read/Write
Pulse Enable Flag	M00816	M00832	Read/Write
ON Duty Setting Error Flag	M00818	M00834	Read Only
Frequency Setting Error Flag	M00819	M00835	Read Only

Reference the table below when configuring each HSC Configuration Register (MW0010 or MW0040):

Input Mode	Output Mode	Register Value
Normal Input (HSC not enabled)	N/A	0
High-Speed Single Phase Counter, Up or Down based on Up/Down input	HW Done Bit Disabled	2
	HW Done output ON when preset is reached	258
	Done output ON when counter is enabled, OFF when preset is reached	770
Quadrature 4X	HW Done Bit Disabled	131
	HW Done output ON when preset is reached	387
	Done output ON when counter is enabled, OFF when preset is reached	899

Reference the table below when configuring the PWM Configuration Registers (MW0059 or MW0075):

Output Mode	Register Value
Normal PWM (fixed frequency)	1
Normal PWM (variable frequency)	2
CW/CCW (fixed frequency)	3
CW/CCW (variable frequency)	4
Pulse/Direction (fixed frequency)	7
Pulse/Direction (variable frequency)	8
Trapezoidal (Fixed Pulse Mode)	9

Wiring:

Bidirectional Inputs (normal) Note: X0, X1, X2, and X3 are high-speed	HSC: Single Phase Up
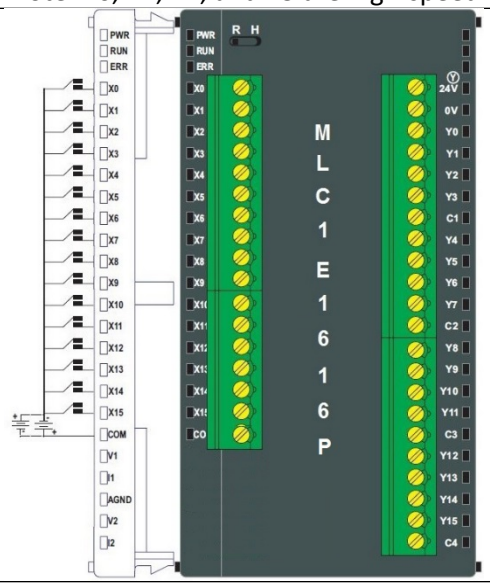	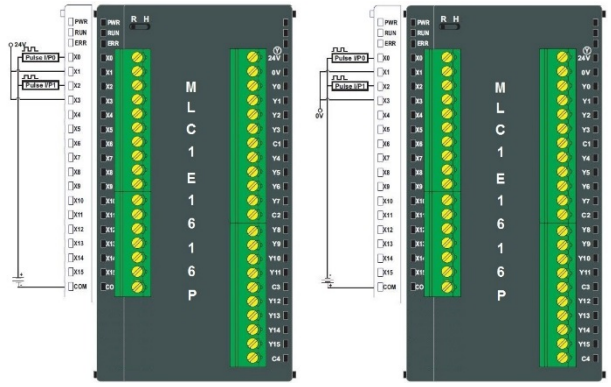

HSC: Quadrature mode	HSC: Single Phase Down
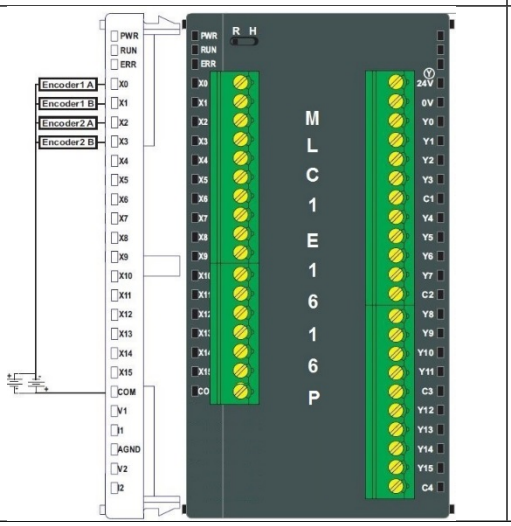	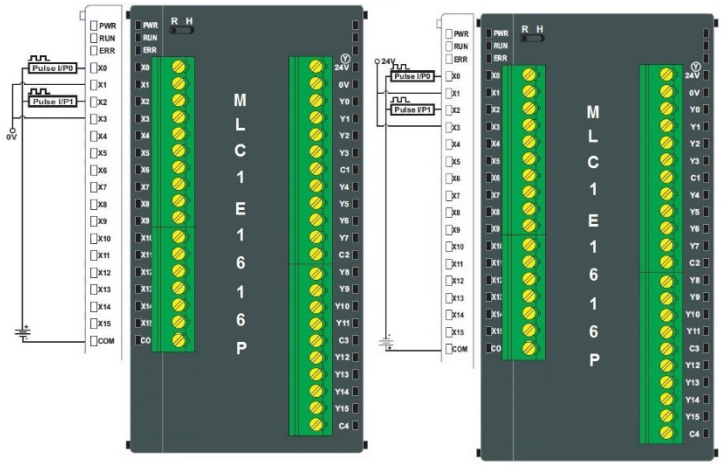

Digital Outputs (normal)
Note: PWM mode use outputs Y0, Y1

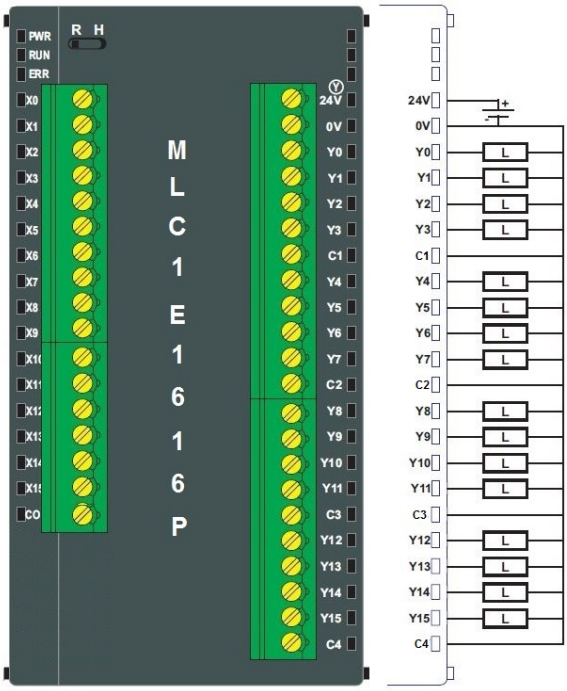

MLC1-E1616Y (CPU w/ 16 Digital Input, 14 Relay & 2 Sourcing Output)

This expandable CPU module has sixteen bidirectional inputs, fourteen relay and two PNP digital outputs. Four of the digital inputs can be configured for two high-speed counters (HSC) using the MW registers. When used as HSCs, inputs X0 & X1 (channel 1) and X2 & X3 (channel 2/3) are used to record incoming pulses. The two PNP outputs (Y0 and Y1) can be configured for Pulse Width Modulation (PWM).

Up to sixteen MLE I/O expansion modules can be added to this CPU module.

The specification below provides information about the inputs/outputs only. For more information regarding communications ports, etc. consult the data sheet.

Specifications:

Power	24VDC, 700mA (+20%; -15%)
Approvals	CE, UL
Connection method	Removable terminal (3.81 mm pitch)
Hardware	
Memory	90 KB Application Memory, 178 KB Ladder Memory
Serial	1 RS232; 1 RS485 2W
USB Slave	Upload/download projects
Digital Inputs	16 bidirectional inputs (4 high-speed X0, X1, X2, and X3)
Rated input voltage	24 VDC
Rated input current	5mA (typical)
Input impedance	3K ohms
Minimum ON voltage	15 VDC
Maximum ON voltage	30 VDC
Minimum OFF voltage	-3 VDC
Maximum OFF voltage	5 VDC
Turn ON Time	10 msec
Turn OFF Time	10 msec
Isolation	Optically isolated from internal circuit

High-Speed Counter (HSC) Mode	
No. of inputs	2 channels (X0/X1, and X2/X3) in Single Phase Up Counter mode or in Quadrature 4X mode
Physical reset inputs	X4 (channel 1) and X5 (channel 2)
Configurable forced outputs (opt)	Y2 (channel 1) and Y3 (channel 2)
Maximum Input Frequency (per channel)	200 KHz
Maximum Input Count	4,294,967,295 (32-bit) with 1 count register and 1 preset register per channel
Digital Outputs	14 relay, 2 sourcing outputs (PNP-type)
Output Capacity	250mA per output maximum
Rated load	250mA @ 30VDC
Nominal load	Relays: DC load: 12Ω 48W (resistive load)@24VDC 48VA (inductive load, UPF[Unity Power Factor]) AC load: 115Ω 460W (resistive load)@230VAC 460VA (inductive load, UPF) PNP: 96Ω 6W (resistive load)@24VDC 6VA (inductive load, UPF)
Minimum ON voltage output	22VDC (measured across load)
Maximum ON voltage output	30VDC (measure across load)
Minimum OFF voltage output	0.2VDC
Maximum OFF voltage output	1VDC
Short Circuit Protection	Yes
Pulse Width Modulation (PWM) Mode	
No. of Outputs	2 [Y0 (channel 1) and Y1 (channel 2)]
PWM frequency (variable)	200 KHz maximum
General	
Operating Temperature	0 to 55°C
Operating Humidity	10% to 90% (non-condensing)
Mechanical Dimension (LxWxH)	3.94x2.05x2.76 inches [100x52x70mm]

Configuration:

Use MAPware-7000 to assign input (X and XW), output (Y and YW) and configuration (M and MW) memory addresses to the module.

Function	Register		Access
X0-X15 Digital Inputs	X00000-15 (XW0000)		Read Only
Y0-Y15 Digital Outputs	Y00000-15 (YW0000)		Read/Write
Single Phase Up/Down Option	**HSC Channel 1**	**HSC Channel 2/3**	
HSC Input Pin	X0	X2	Read Only
Direction Pin (Count Up if ON, Down if OFF)	X1	X3	Read Only
Quadrature Inputs	**Pair 1**	**Pair 2**	
Counter Inputs	X0, X1	X2, X3	Read Only
Physical reset inputs	X4	X5	Read Only
HSC Configuration Register	MW0010	MW0040	Read/Write
HSC Counter Register (Current Value)	MW0011	MW0041	Read/Write
HSC Preset Register	MW0013	MW0043	Read/Write
HSC Enable Bit	M00240	M00720	Read/Write
HSC Reset Bit	M00241	M00721	Read/Write
HSC Preset Reached Bit	M00242	M00722	Read Only
Output Flag	Y2	Y3	Read/Write
PWM Outputs	**Channel 1**	**Channel 2**	
Output	Y0	Y1	Read Only
PWM Configuration Register	MW0059	MW0075	Read/Write
Frequency Setting Register	MW0060	MW0076	Read/Write
ON Duty Setting Register (Duty Cycle)	MW0062	MW0078	Read/Write
Pulse Enable Flag	M00816	M00832	Read/Write
ON Duty Setting Error Flag	M00818	M00834	Read Only
Frequency Setting Error Flag	M00819	M00835	Read Only

Reference the table below when configuring each HSC Configuration Register (MW0010 or MW0040):

Input Mode	Output Mode	Register Value
Normal Input (HSC not enabled)	N/A	0
High-Speed Single-Phase Counter, Up or Down based on Up/Down input	HW Done Bit Disabled	2
	HW Done output ON when preset is reached	258
	Done output ON when counter is enabled, OFF when preset is reached	770
Quadrature 4X	HW Done Bit Disabled	131
	HW Done output ON when preset is reached	387
	Done output ON when counter is enabled, OFF when preset is reached	899

Reference the table below when configuring the PWM Configuration Registers (MW0059 or MW0075):

Output Mode	Register Value
Normal PWM (fixed frequency)	1
Normal PWM (variable frequency)	2
CW/CCW (fixed frequency)	3
CW/CCW (variable frequency)	4
Pulse/Direction (fixed frequency)	7
Pulse/Direction (variable frequency)	8
Trapezoidal (Fixed Pulse Mode)	9

Wiring:

Bidirectional Inputs (normal) Note: X0, X1, X2, and X3 are high-speed	HSC: Single Phase Up
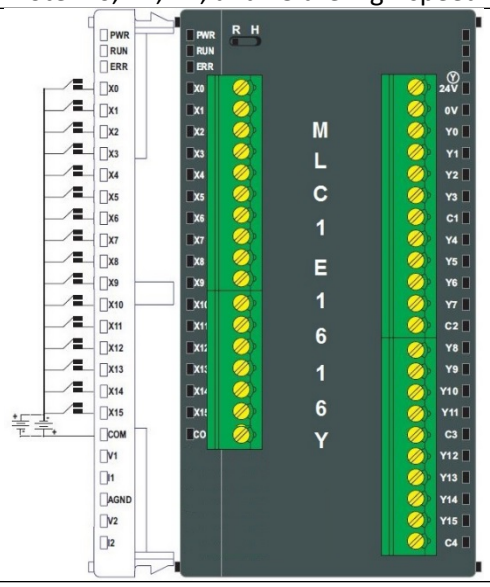	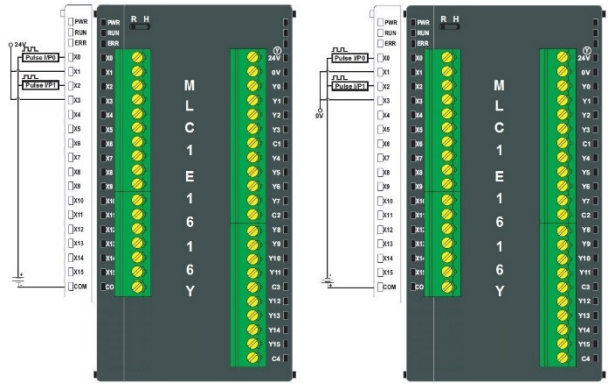

HSC: Quadrature mode	HSC: Single Phase Down
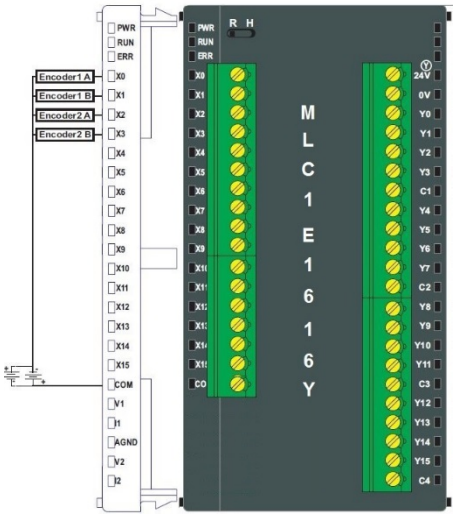	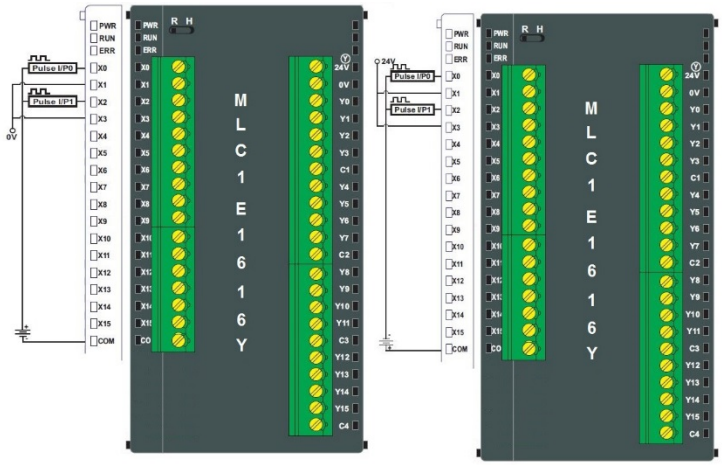

Digital Outputs (normal)
Note: PWM mode use outputs Y0, Y1

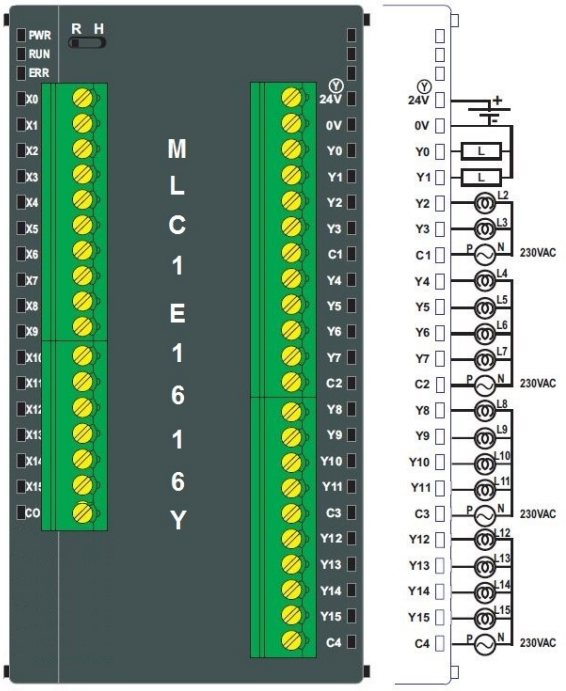

MLC1-E0808Y0402T (CPU w/ 8 Digital Input, 6 Relay & 2 Sourcing Output, 4 Analog Input, 2 Analog Output)

This expandable CPU module has eight bidirectional inputs, six relay and two PNP digital outputs, four analog inputs, and two analog outputs. Four of the digital inputs can be configured for two high-speed counters (HSC) using the MW registers. When used as HSCs, inputs X0 & X1 (channel 1) and X2 & X3 (channel 2/3) are used to record incoming pulses. The two PNP outputs (Y0 and Y1) can be configured for Pulse Width Modulation (PWM).

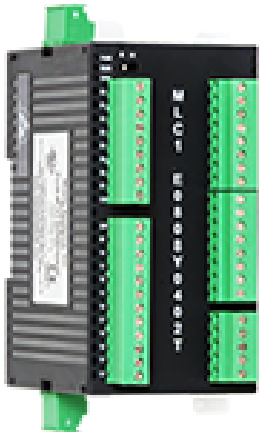

The four analog inputs support:

- 0-100 mV, 0-50mV, 0-10V, or 0-5V
- 0-20mA, or 4-20mA
- RTD PT-100 (Alpha1 or Alpha2)
- Thermocouple (Types J, K)

And 2 analog outputs, can deliver:

- 0-10V
- 4-20mA

Up to sixteen MLE I/O expansion modules can be added to this CPU module.

The specification below provides information about the inputs/outputs only. For more information regarding communications ports, etc. consult the data sheet.

Specifications:

Power	24VDC, 700mA (+20%; -15%)
Approvals	CE, UL
Connection method	Removable terminal (3.81 mm pitch)
Hardware	
Memory	90 KB Application Memory, 178 KB Ladder Memory
Serial	1 RS232; 1 RS485 2W
USB Slave	Upload/download projects
Digital Inputs	8 bidirectional inputs (4 high-speed X0, X1, X2, and X3)
Rated input voltage	24 VDC
Rated input current	5mA (typical)
Input impedance	3K ohms
Minimum ON voltage	15 VDC
Maximum ON voltage	30 VDC

Minimum OFF voltage	-3 VDC
Maximum OFF voltage	5 VDC
Turn ON Time	10 msec
Turn OFF Time	10 msec
Isolation	Optically isolated from internal circuit
High-Speed Counter (HSC) Mode	
No. of inputs	2 channels (X0/X1, and X2/X3) in Single Phase Up Counter mode or in Quadrature 4X mode
Physical reset inputs	X4 (channel 1) and X5 (channel 2)
Configurable forced outputs (opt)	Y2 (channel 1) and Y3 (channel 2)
Maximum Input Frequency (per channel)	200 KHz
Maximum Input Count	4,294,967,295 (32-bit) with 1 count register and 1 preset register per channel
Digital Outputs	6 relay, 2 sourcing outputs (PNP-type)
Output Capacity	250mA per output maximum
Rated load	250mA @ 30VDC
Nominal load	Relays: DC load: 12Ω 48W (resistive load)@24VDC 48VA (inductive load, UPF[Unity Power Factor]) AC load: 115Ω 460W (resistive load)@230VAC 460VA (inductive load, UPF) PNP: 96Ω 6W (resistive load)@24VDC 6VA (inductive load, UPF)
Minimum ON voltage output	22VDC (measured across load)
Maximum ON voltage output	30VDC (measure across load)
Minimum OFF voltage output	0.2VDC
Maximum OFF voltage output	1VDC
Short Circuit Protection	Yes
Pulse Width Modulation (PWM) Mode	
No. of Outputs	2 [Y0 (channel 1) and Y1 (channel 2)]
PWM frequency (variable)	200 KHz maximum

Analog Inputs	4 Inputs: • Voltage mode (0-10V, 0-5V, 0-100mV, 0-50mV) • Current mode (0-20mA, 4-20mA) • RTD PT100 (alpha1, alpha2) • Thermocouple (Type J, K)
Resolution	16-bit
Accuracy	0.2% of full scale@25°C (voltage) 0.3% of full scale@25°C (current)
Voltage Mode	
Input Range	0 to 10V, 0-5V, 0-100mV, 0-50mV
Input Impedance	1MΩ
Conversion cycle time (all channels)	760 msec. for 0-10V, 0-5V
Current Mode	
Input Range	0-20mA, 4-20mA
Input Impedance	100Ω
Conversion cycle time (all channels)	670 msec.
Analog Outputs	2 Outputs (0-10V, 4 to 20mA)
Resolution	12-bit
Accuracy	0.2% of full scale@25°C
Voltage Mode	
Output Range	0 to 10VDC
Load Requirements	1000Ω minimum
Current Mode	
Output Range	4-20mA
Load Requirements	500Ω maximum
General	
Operating Temperature	0 to 55°C
Operating Humidity	10% to 90% (non-condensing)
Mechanical Dimension (LxWxH)	3.94x2.05x2.76 inches [100x52x70mm]

Configuration:

Use MAPware-7000 to assign input (X and XW), output (Y and YW) and configuration (M and MW) memory addresses to the module.

Function	Register		Access
X0-X7 Digital Inputs	X00000-7 (XW0000)		Read Only
Y0-Y7 Digital Outputs	Y00000-7 (YW0000)		Read/Write
Single Phase Up/Down Option	**HSC Channel 1**	**HSC Channel 2/3**	
HSC Input Pin	X0	X2	Read Only
Direction Pin (Count Up if ON, Down if OFF)	X1	X3	Read Only
Quadrature Inputs	**Pair 1**	**Pair 2**	
Counter Inputs	X0, X1	X2, X3	Read Only
Physical reset inputs	X4	X5	Read Only
HSC Configuration Register	MW0010	MW0040	Read/Write
HSC Counter Register (Current Value)	MW0011	MW0041	Read/Write
HSC Preset Register	MW0013	MW0043	Read/Write
HSC Enable Bit	M00240	M00720	Read/Write
HSC Reset Bit	M00241	M00721	Read/Write
HSC Preset Reached Bit	M00242	M00722	Read Only
Output Flag	Y2	Y3	Read/Write
PWM Outputs	**Channel 1**	**Channel 2**	
Output	Y0	Y1	Read Only
PWM Configuration Register	MW0059	MW0075	Read/Write
Frequency Setting Register	MW0060	MW0076	Read/Write
ON Duty Setting Register (Duty Cycle)	MW0062	MW0078	Read/Write
Pulse Enable Flag	M00816	M00832	Read/Write
ON Duty Setting Error Flag	M00818	M00834	Read Only
Frequency Setting Error Flag	M00819	M00835	Read Only
Analog Inputs	**Register**		
Input Channel 0 Data	XW0001		Read Only
Input Channel 1 Data	XW0003		Read Only
Input Channel 2 Data	XW0005		Read Only
Input Channel 3 Data	XW0007		Read Only
Input Channel 0 Config Register	MW0071		Read/Write
Input Channel 1 Config Register	MW0072		Read/Write
Input Channel 2 Config Register	MW0087		Read/Write
Input Channel 3 Config Register	MW0088		Read/Write
Analog Outputs	**Register**		
Output Channel 0 Data (Voltage)	YW0001		Read/Write
Output Channel 0 Data (Current)	YW0002		Read/Write
Output Channel 1 Data (Voltage)	YW0003		Read/Write
Output Channel 1 Data (Current)	YW0004		Read/Write
Output Channel 0 Config Register	MW0073		Read/Write
Output Channel 1 Config Register	MW0089		Read/Write

Reference the table below when configuring each HSC Configuration Register (MW0010 or MW0040):

Input Mode	Output Mode	Register Value
Normal Input (HSC not enabled)	N/A	0
High-Speed Single-Phase Counter, Up or Down based on Up/Down input	HW Done Bit Disabled	2
	HW Done output ON when preset is reached	258
	Done output ON when counter is enabled, OFF when preset is reached	770
Quadrature 4X	HW Done Bit Disabled	131
	HW Done output ON when preset is reached	387
	Done output ON when counter is enabled, OFF when preset is reached	899

Reference the table below when configuring the PWM Configuration Registers (MW0059 or MW0075):

Output Mode	Register Value
Normal PWM (fixed frequency)	1
Normal PWM (variable frequency)	2
CW/CCW (fixed frequency)	3
CW/CCW (variable frequency)	4
Pulse/Direction (fixed frequency)	7
Pulse/Direction (variable frequency)	8
Trapezoidal (Fixed Pulse Mode)	9

Reference the tables below when configuring each Analog Input (MW0071/72/87/88) and Output Configuration Registers (MW0073 or MW0089):

Input Signal Type	Register Value
Voltage, 0 to 10V	1
Voltage, 0 to 5V	6
Current, 4 to 20mA	2
Current, 0 to 20mA	3
0 to 100mV	4
0 to 50mV	5
0 to 5V	6
RTD PT100 Alpha1	7
RTD PT100 Alpha2	8
Thermocouple (Type J)	14
Thermocouple (Type K)	15

Output Signal Type	Register Value
Voltage, 0 to 10V	2
Current, 4 to 20mA	5

The values in the appropriate analog input register range from 0-64000, with over and under indications at 65000 and 65001, while analog output register values range from 0-4095.

Reg Value	Input Values					
	0 to 20mA	4 to 20mA	0 to 10V	0 to 5V	0 to 100mV	0 to 50mV
0	0mA	4mA	0V	0V	0	0
16000	5mA	8mA	2.5V	1.25V	25	12.5
32000	10mA	12mA	5V	2.5V	50	25
48000	15mA	16mA	7.5V	3.75V	75	37.5
64000	20mA	20mA	10V	5V	100	50
65000	< 0mA	< 4mA	< 0V	< 0V	< 0V	< 0V
65001	> 20mA	> 20mA	> 10V	> 5V	> 100mV	> 50mV

Reg Value	Output Values	
	0 to 10V	4 to 20mA
0	0	4mA
1024	2.5V	8mA
2048	5V	12mA
3072	7.5V	16mA
4095	10V	20mA

For RTD/Thermocouple

Digital Count Value = 10 * Temperature (in C)

The digital count value is in signed integer format. For example, if the temperature is 57.6 degrees C, the digital count in the XW register will be 578.

Wiring:

Bidirectional Inputs (normal) Note: X0, X1, X2, and X3 are high-speed	HSC: Single Phase Up
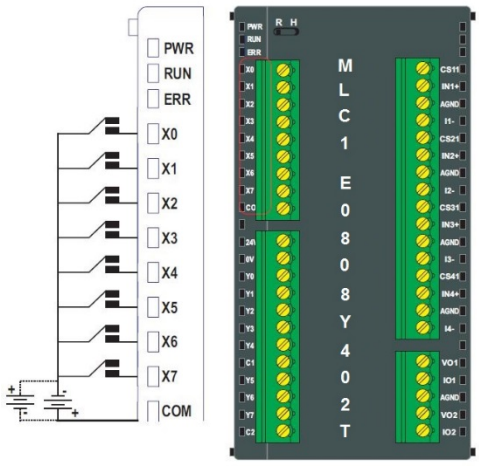	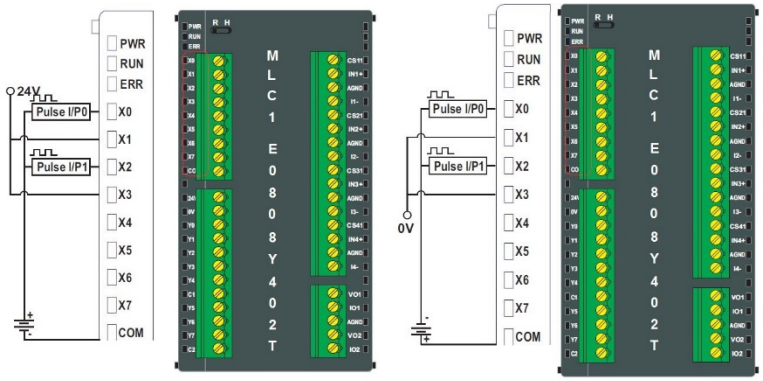

HSC: Quadrature mode	HSC: Single Phase Down
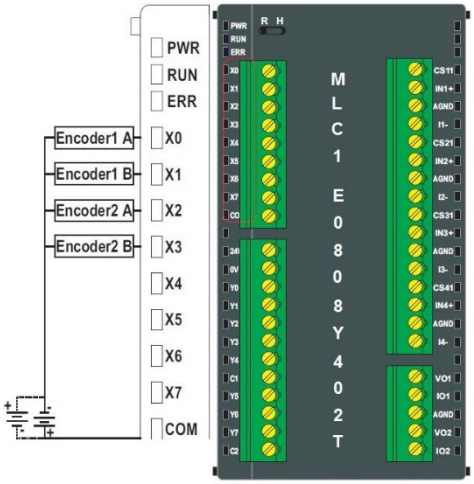	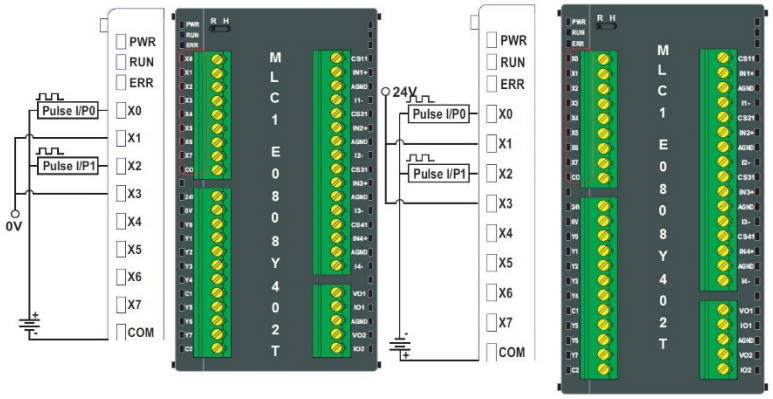
Digital Outputs (normal) Note: PWM mode use outputs Y0, Y1	
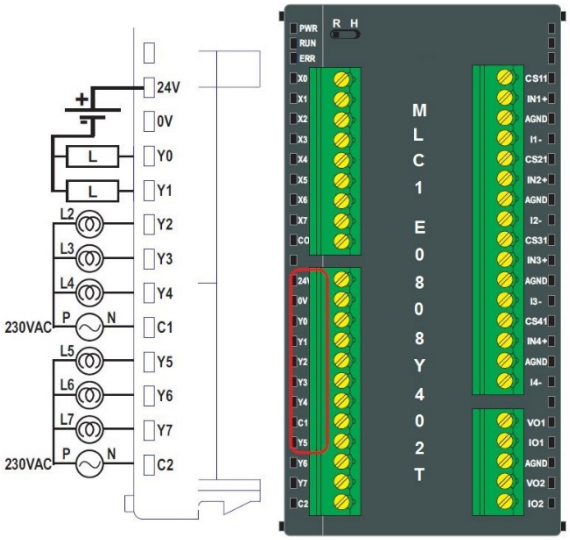	

Analog Inputs (voltage)	Analog Inputs (current)
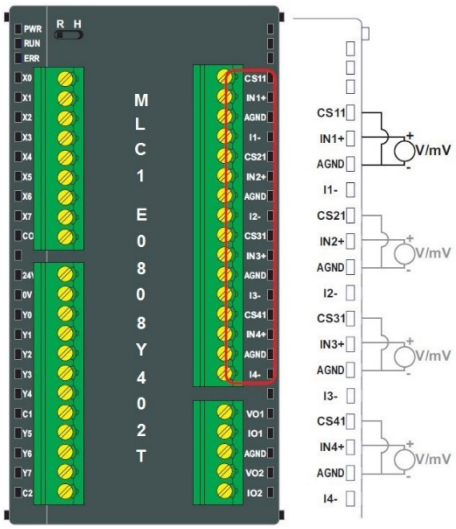	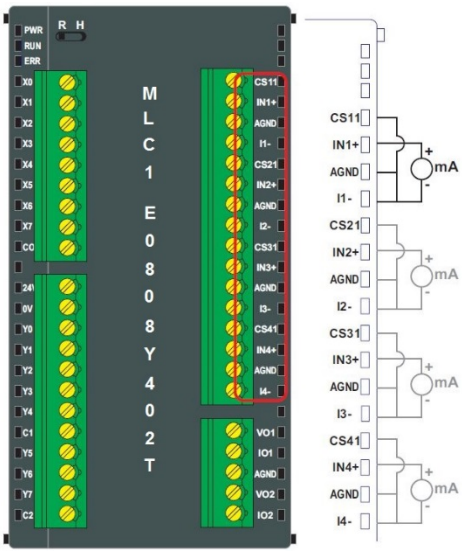
Analog Inputs (RTD)	**Analog Inputs (Thermocouple)**
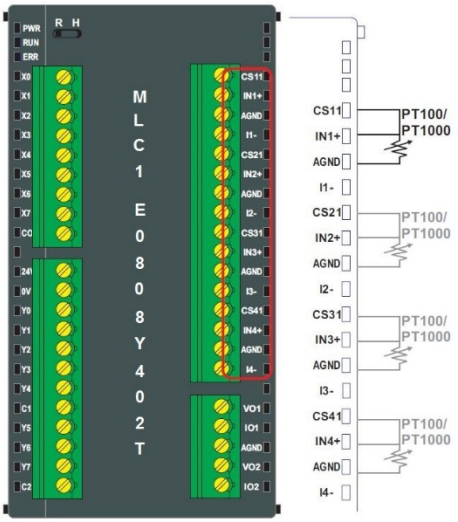	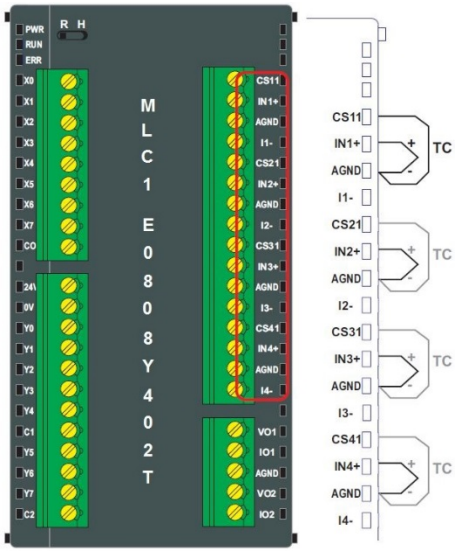

Analog Outputs (voltage)	Analog Outputs (current)
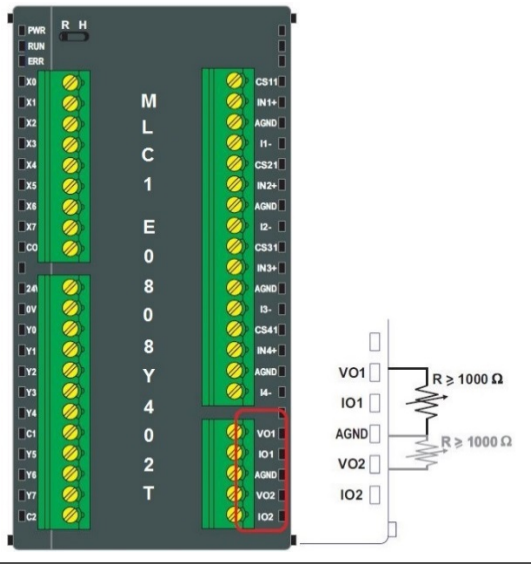	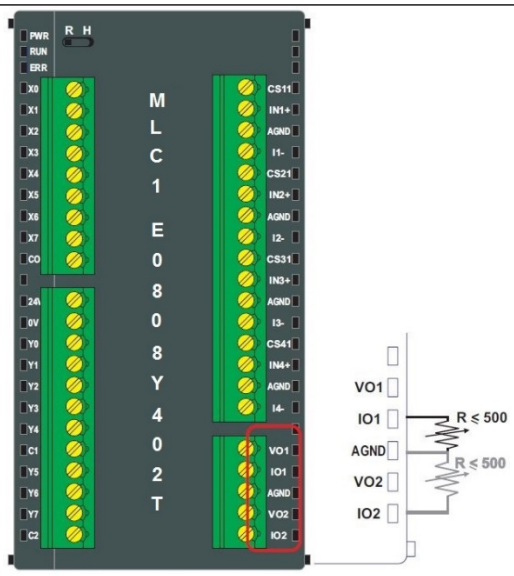

MLC1-E1616N0201 (CPU w/ 16 Digital Input, 16 Sinking Output, 2 Analog Input, 1 Analog Output)

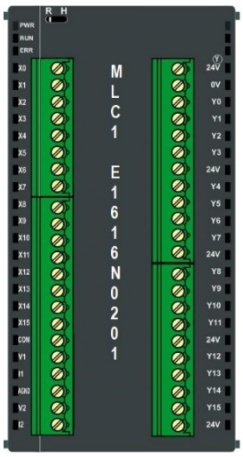

This expandable CPU module has sixteen bidirectional inputs, sixteen NPN digital outputs, two analog inputs, and one analog output. Four of the digital inputs can be configured for two high-speed counters (HSC) using the MW registers. When used as HSCs, inputs X0 & X1 (channel 1) and X2 & X3 (channel 2/3) are used to record incoming pulses. Two of the digital outputs (Y0 and Y1) can be configured for Pulse Width Modulation (PWM). The two analog inputs support voltage and current mode and the analog output supports 0-10V voltage or 4-20mA current mode.

Up to sixteen MLE I/O expansion modules can be added to this CPU module.

The specification below provides information about the inputs/outputs only. For more information regarding communications ports, etc. consult the data sheet.

Specifications:

Power	24VDC, 500mA (+20%; -15%)
Approvals	CE, UL
Connection method	Removable terminal (3.81 mm pitch)
Hardware	
Memory	90 KB Application Memory, 178 KB Ladder Memory
Serial	1 RS232; 1 RS485 2W
USB Slave	Upload/download projects
Digital Inputs	16 bidirectional inputs (4 high-speed X0, X1, X2, and X3)
Rated input voltage	24 VDC
Rated input current	5mA (typical)
Input impedance	3K ohms
Minimum ON voltage	15 VDC
Maximum ON voltage	30 VDC
Minimum OFF voltage	-3 VDC
Maximum OFF voltage	5 VDC
Turn ON Time	10 msec
Turn OFF Time	10 msec
Isolation	Optically isolated from internal circuit

High-Speed Counter (HSC) Mode	
No. of inputs	2 channels (X0/X1, and X2/X3) in Single Phase Up Counter mode or in Quadrature 4X mode
Physical reset inputs	X4 (channel 1) and X5 (channel 2)
Configurable forced outputs (opt)	Y2 (channel 1) and Y3 (channel 2)
Maximum Input Frequency (per channel)	200 KHz
Maximum Input Count	4,294,967,295 (32-bit) with 1 count register and 1 preset register per channel
Digital Outputs	16 sinking outputs (NPN-type)
Output Capacity	300mA per output maximum
Rated load	300mA @ 30VDC
Nominal load	PNP: 80Ω 7.2W (resistive load)@24VDC 7.2VA (inductive load, Unity Power Factor)
Minimum ON voltage output	22VDC (measured across load)
Maximum ON voltage output	30VDC (measure across load)
Minimum OFF voltage output	0.2VDC
Maximum OFF voltage output	1VDC
Short Circuit Protection	Yes
Pulse Width Modulation (PWM) Mode	
No. of Outputs	2 [Y0 (channel 1) and Y1 (channel 2)]
PWM frequency (variable)	200 KHz maximum
Analog Inputs	2 Inputs: • Voltage mode (0-10V, 0-5V) • Current mode (0-20mA, 4-20mA)
Resolution	16-bit
Accuracy	0.2% of full scale@25°C
Voltage Mode	
Input Range	0 to 10V, 0-5V
Input Impedance	1MΩ
Conversion cycle time (all channels)	760 msec. for 0-10V, 0-5V 670 msec. for 0-100mV, 0-50mV
Current Mode	
Input Range	0-20mA, 4-20mA
Input Impedance	100Ω

Conversion cycle time (all channels)	670 msec.
Analog Outputs	2 Outputs: • Voltage mode (0-10V) • Current mode (4 to 20mA)
Resolution	12-bit
Accuracy	0.2% of full scale@25°C
Voltage Mode	
Output Range	0 to 10VDC
Load Requirements	1000Ω minimum
Current Mode	
Output Range	4-20mA
Load Requirements	500Ω maximum
General	
Operating Temperature	0 to 55°C
Operating Humidity	10% to 90% (non-condensing)
Mechanical Dimension (LxWxH)	3.94x2.05x2.76 inches [100x52x70mm]

Configuration:

Use MAPware-7000 to assign input (X and XW), output (Y and YW) and configuration (M and MW) memory addresses to the module.

Function	Register		Access
X0-X15 Digital Inputs	X00000-15 (XW0000)		Read Only
Y0-Y15 Digital Outputs	Y00000-15 (YW0000)		Read/Write
Single Phase Up/Down Option	**HSC Channel 1**	**HSC Channel 2/3**	
HSC Input Pin	X0	X2	Read Only
Direction Pin (Count Up if ON, Down if OFF)	X1	X3	Read Only
Quadrature Inputs	**Pair 1**	**Pair 2**	
Counter Inputs	X0, X1	X2, X3	Read Only
Physical reset inputs	X4	X5	Read Only
HSC Configuration Register	MW0010	MW0040	Read/Write
HSC Counter Register (Current Value)	MW0011	MW0041	Read/Write
HSC Preset Register	MW0013	MW0043	Read/Write
HSC Enable Bit	M00240	M00720	Read/Write
HSC Reset Bit	M00241	M00721	Read/Write
HSC Preset Reached Bit	M00242	M00722	Read Only
Output Flag	Y2	Y3	Read/Write
PWM Outputs	**Channel 1**	**Channel 2**	
Output	Y0	Y1	Read Only
PWM Configuration Register	MW0059	MW0075	Read/Write
Frequency Setting Register	MW0060	MW0076	Read/Write
ON Duty Setting Register (Duty Cycle)	MW0062	MW0078	Read/Write
Pulse Enable Flag	M00816	M00832	Read/Write
ON Duty Setting Error Flag	M00818	M00834	Read Only
Frequency Setting Error Flag	M00819	M00835	Read Only
Analog Inputs	**Register**		
Input Channel 0 Data	XW0001		Read Only
Input Channel 1 Data	XW0003		Read Only
Input Channel 0 Config Register	MW0071		Read/Write
Input Channel 1 Config Register	MW0072		Read/Write
Analog Outputs	**Register**		
Output Channel 0 Data (Voltage)	YW0001		Read/Write
Output Channel 0 Data (Current)	YW0002		Read/Write
Output Channel 0 Config Register	MW0073		Read/Write

Reference the table below when configuring each HSC Configuration Register (MW0010 or MW0040):

Input Mode	Output Mode	Register Value
Normal Input (HSC not enabled)	N/A	0
High-Speed Single-Phase Counter, Up or Down based on Up/Down input	HW Done Bit Disabled	2
	HW Done output ON when preset is reached	258
	Done output ON when counter is enabled, OFF when preset is reached	770
Quadrature 4X	HW Done Bit Disabled	131
	HW Done output ON when preset is reached	387
	Done output ON when counter is enabled, OFF when preset is reached	899

Reference the table below when configuring the PWM Configuration Registers (MW0059 or MW0075):

Output Mode	Register Value
Normal PWM (fixed frequency)	1
Normal PWM (variable frequency)	2
CW/CCW (fixed frequency)	3
CW/CCW (variable frequency)	4
Pulse/Direction (fixed frequency)	7
Pulse/Direction (variable frequency)	8
Trapezoidal (Fixed Pulse Mode)	9

Reference the tables below when configuring each Analog Input (MW0071 or MW0072) and Output Configuration Register (MW0073):

Input Signal Type	Register Value
Voltage, 0 to 10V	1
Voltage, 0 to 5V	6
Current, 4 to 20mA	2
Current, 0 to 20mA	3

Output Signal Type	Register Value
Voltage, 0 to 10V	2
Current, 4 to 20mA	5

The values in the appropriate analog input register range from 0-64000, with over and under indications at 65000 and 65001, while analog output register values range from 0-4095.

Reg Value	Input Values			
	0 to 20mA	4 to 20mA	0 to 10V	0 to 5V
0	0mA	4mA	0V	0V
16000	5mA	8mA	2.5V	1.25V
32000	10mA	12mA	5V	2.5V
48000	15mA	16mA	7.5V	3.75V
64000	20mA	20mA	10V	5V
65000	< 0mA	< 4mA	< 0V	< 0V
65001	> 20mA	> 20mA	> 10V	> 5V

Reg Value	Output Values	
	0 to 10V	4 to 20mA
0	0	4mA
1024	2.5V	8mA
2048	5V	12mA
3072	7.5V	16mA
4095	10V	20mA

Wiring:

<table>
<tr><td>Bidirectional Inputs (normal)
Note: X0, X1, X2, and X3 are high-speed</td><td>HSC: Single Phase Up</td></tr>
<tr><td> 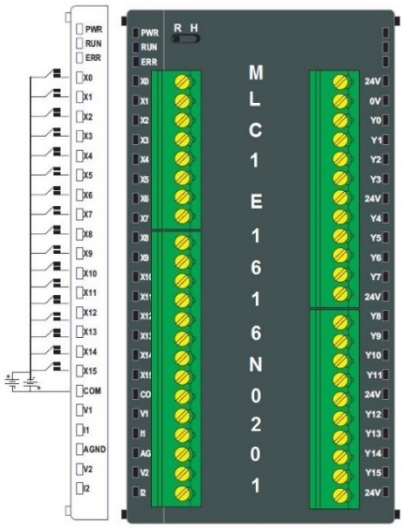 </td><td> 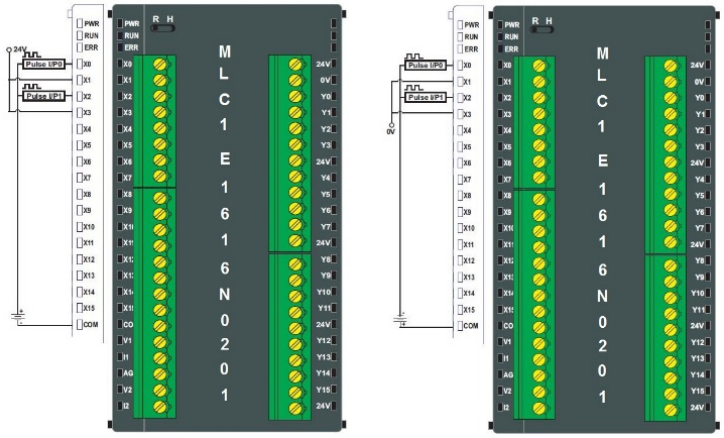 </td></tr>
<tr><td>HSC: Quadrature mode</td><td>HSC: Single Phase Down</td></tr>
<tr><td> 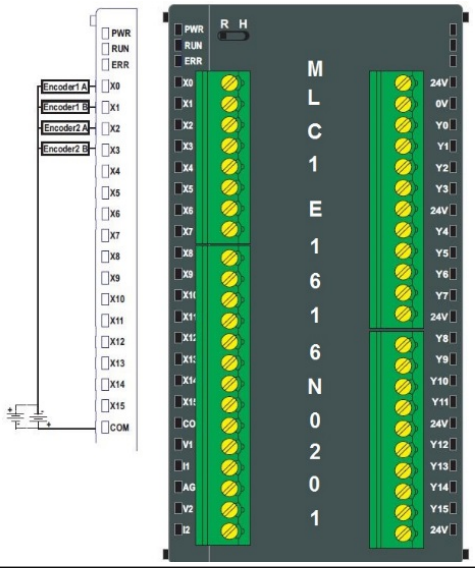 </td><td> 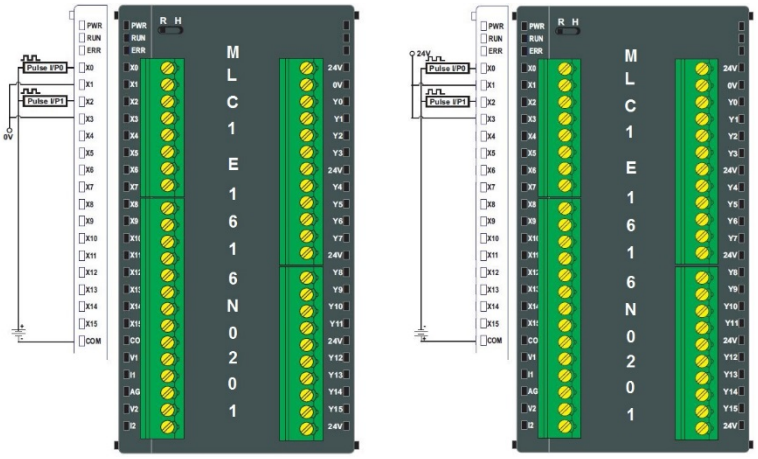 </td></tr>
</table>

Digital Outputs (normal)
Note: PWM mode use outputs Y0, Y1

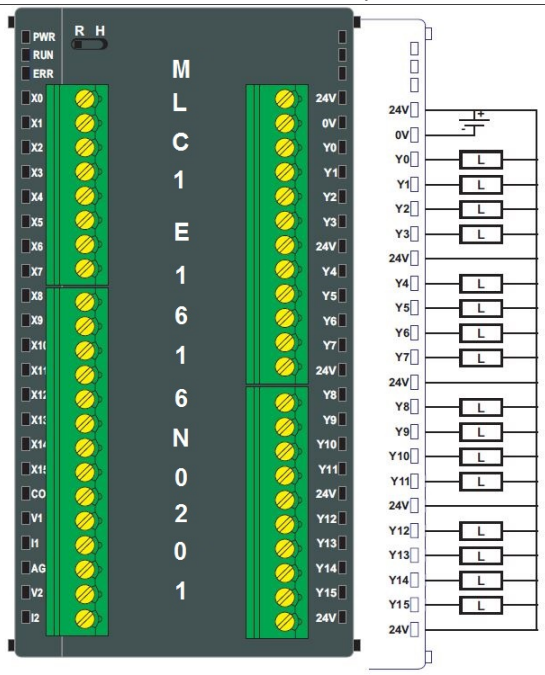

Analog Inputs (voltage)

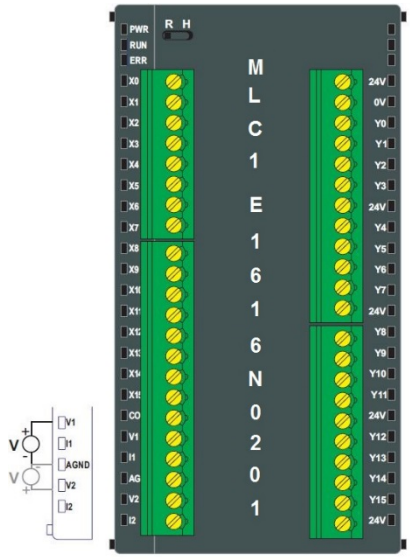

Analog Inputs (current)

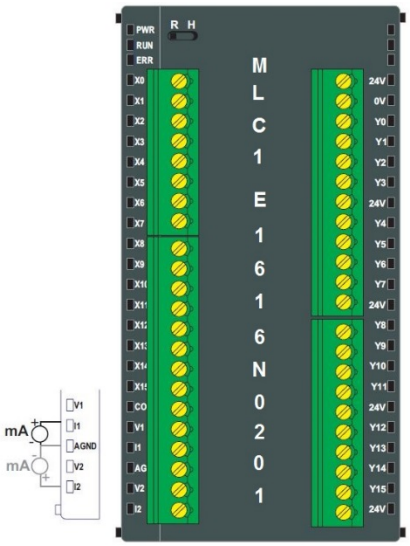

Analog Outputs (voltage)	Analog Outputs (current)
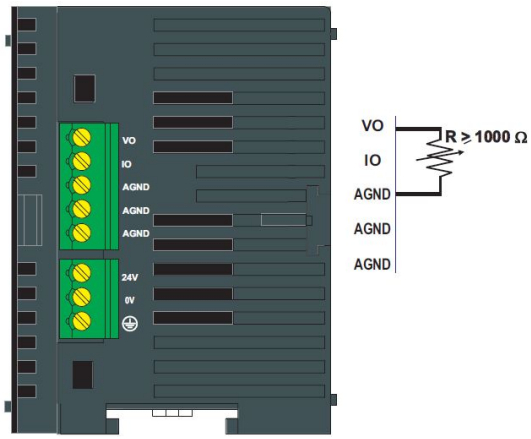	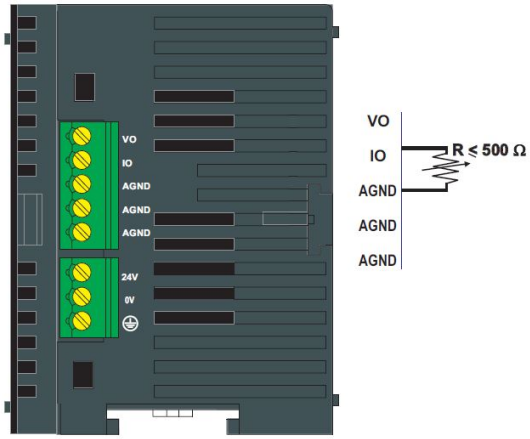

MLC1-E1616P0201 (CPU w/ 16 Digital Input, 16 Sourcing Output, 2 Analog Input, 1 Analog Output)

This expandable CPU module has sixteen bidirectional inputs, sixteen PNP digital outputs, two analog inputs, and one analog output. Four of the digital inputs can be configured for two high-speed counters (HSC) using the MW registers. When used as HSCs, inputs X0 & X1 (channel 1) and X2 & X3 (channel 2/3) are used to record incoming pulses. Two of the digital outputs (Y0 and Y1) can be configured for Pulse Width Modulation (PWM). The two analog inputs support voltage and current mode and the analog output supports 0-10V voltage or 4-20mA current mode.

Up to sixteen MLE I/O expansion modules can be added to this CPU module.

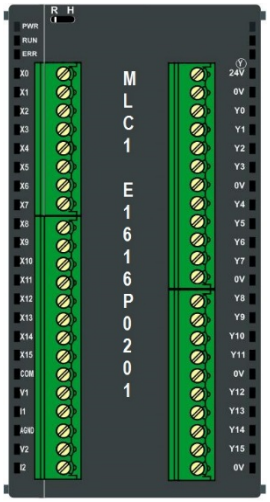

The specification below provides information about the inputs/outputs only. For more information regarding communications ports, etc. consult the data sheet.

Specifications:

Power	24VDC, 500mA (+20%; -15%)
Approvals	CE, UL
Connection method	Removable terminal (3.81 mm pitch)
Hardware	
Memory	90 KB Application Memory, 178 KB Ladder Memory
Serial	1 RS232; 1 RS485 2W
USB Slave	Upload/download projects
Digital Inputs	16 bidirectional inputs (4 high-speed X0, X1, X2, and X3)
Rated input voltage	24 VDC
Rated input current	5mA (typical)
Input impedance	3K ohms
Minimum ON voltage	15 VDC
Maximum ON voltage	30 VDC
Minimum OFF voltage	-3 VDC
Maximum OFF voltage	5 VDC
Turn ON Time	10 msec
Turn OFF Time	10 msec
Isolation	Optically isolated from internal circuit

High-Speed Counter (HSC) Mode	
No. of inputs	2 channels (X0/X1, and X2/X3) in Single Phase Up Counter mode or in Quadrature 4X mode
Physical reset inputs	X4 (channel 1) and X5 (channel 2)
Configurable forced outputs (opt)	Y2 (channel 1) and Y3 (channel 2)
Maximum Input Frequency (per channel)	200 KHz
Maximum Input Count	4,294,967,295 (32-bit) with 1 count register and 1 preset register per channel
Digital Outputs	16 sourcing outputs (PNP-type)
Output Capacity	250mA per output maximum
Rated load	250mA @ 30VDC
Nominal load	PNP: 96Ω 6W (resistive load)@24VDC 6VA (inductive load, UPF)
Minimum ON voltage output	22VDC (measured across load)
Maximum ON voltage output	30VDC (measure across load)
Minimum OFF voltage output	0.2VDC
Maximum OFF voltage output	1VDC
Short Circuit Protection	Yes
Pulse Width Modulation (PWM) Mode	
No. of Outputs	2 [Y0 (channel 1) and Y1 (channel 2)]
PWM frequency (variable)	200 KHz maximum
Analog Inputs	2 Inputs: • Voltage mode (0-10V, 0-5V) • Current mode (0-20mA, 4-20mA)
Resolution	16-bit
Accuracy	0.2% of full scale@25°C
Voltage Mode	
Input Range	0 to 10V, 0-5V
Input Impedance	1MΩ
Conversion cycle time (all channels)	760 msec. for 0-10V, 0-5V 670 msec. for 0-100mV, 0-50mV
Current Mode	
Input Range	0-20mA, 4-20mA
Input Impedance	100Ω

Conversion cycle time (all channels)	670 msec.
Analog Outputs	2 Outputs: • Voltage mode (0-10V) • Current mode (4 to 20mA)
Resolution	12-bit
Accuracy	0.2% of full scale@25°C
Voltage Mode	
Output Range	0 to 10VDC
Load Requirements	1000Ω minimum
Current Mode	
Output Range	4-20mA
Load Requirements	500Ω maximum
General	
Operating Temperature	0 to 55°C
Operating Humidity	10% to 90% (non-condensing)
Mechanical Dimension (LxWxH)	3.94x2.05x2.76 inches [100x52x70mm]

Configuration:

Use MAPware-7000 to assign input (X and XW), output (Y and YW) and configuration (M and MW) memory addresses to the module.

Function	Register		Access
X0-X15 Digital Inputs	X00000-15 (XW0000)		Read Only
Y0-Y15 Digital Outputs	Y00000-15 (YW0000)		Read/Write
Single Phase Up/Down Option	**HSC Channel 1**	**HSC Channel 2/3**	
HSC Input Pin	X0	X2	Read Only
Direction Pin (Count Up if ON, Down if OFF)	X1	X3	Read Only
Quadrature Inputs	**Pair 1**	**Pair 2**	
Counter Inputs	X0, X1	X2, X3	Read Only
Physical reset inputs	X4	X5	Read Only
HSC Configuration Register	MW0010	MW0040	Read/Write
HSC Counter Register (Current Value)	MW0011	MW0041	Read/Write
HSC Preset Register	MW0013	MW0043	Read/Write
HSC Enable Bit	M00240	M00720	Read/Write
HSC Reset Bit	M00241	M00721	Read/Write
HSC Preset Reached Bit	M00242	M00722	Read Only
Output Flag	Y2	Y3	Read/Write
PWM Outputs	**Channel 1**	**Channel 2**	
Output	Y0	Y1	Read Only
PWM Configuration Register	MW0059	MW0075	Read/Write
Frequency Setting Register	MW0060	MW0076	Read/Write
ON Duty Setting Register (Duty Cycle)	MW0062	MW0078	Read/Write
Pulse Enable Flag	M00816	M00832	Read/Write
ON Duty Setting Error Flag	M00818	M00834	Read Only
Frequency Setting Error Flag	M00819	M00835	Read Only
Analog Inputs	**Register**		
Input Channel 0 Data	XW0001		Read Only
Input Channel 1 Data	XW0003		Read Only
Input Channel 0 Config Register	MW0071		Read/Write
Input Channel 1 Config Register	MW0072		Read/Write
Analog Outputs	**Register**		
Output Channel 0 Data (Voltage)	YW0001		Read/Write
Output Channel 0 Data (Current)	YW0002		Read/Write
Output Channel 0 Config Register	MW0073		Read/Write

Reference the table below when configuring each HSC Configuration Register (MW0010 or MW0040):

Input Mode	Output Mode	Register Value
Normal Input (HSC not enabled)	N/A	0
High-Speed Single-Phase Counter, Up or Down based on Up/Down input	HW Done Bit Disabled	2
	HW Done output ON when preset is reached	258
	Done output ON when counter is enabled, OFF when preset is reached	770
Quadrature 4X	HW Done Bit Disabled	131
	HW Done output ON when preset is reached	387
	Done output ON when counter is enabled, OFF when preset is reached	899

Reference the table below when configuring the PWM Configuration Registers (MW0059 or MW0075):

Output Mode	Register Value
Normal PWM (fixed frequency)	1
Normal PWM (variable frequency)	2
CW/CCW (fixed frequency)	3
CW/CCW (variable frequency)	4
Pulse/Direction (fixed frequency)	7
Pulse/Direction (variable frequency)	8
Trapezoidal (Fixed Pulse Mode)	9

Reference the tables below when configuring each Analog Input (MW0071 or MW0072) and Output Configuration Register (MW0073):

Input Signal Type	Register Value
Voltage, 0 to 10V	1
Voltage, 0 to 5V	6
Current, 4 to 20mA	2
Current, 0 to 20mA	3

Output Signal Type	Register Value
Voltage, 0 to 10V	2
Current, 4 to 20mA	5

The values in the appropriate analog input register range from 0-64000, with over and under indications at 65000 and 65001, while analog output register values range from 0-4095.

Reg Value	Input Values			
	0 to 20mA	4 to 20mA	0 to 10V	0 to 5V
0	0mA	4mA	0V	0V
16000	5mA	8mA	2.5V	1.25V
32000	10mA	12mA	5V	2.5V
48000	15mA	16mA	7.5V	3.75V
64000	20mA	20mA	10V	5V
65000	< 0mA	< 4mA	< 0V	< 0V
65001	> 20mA	> 20mA	> 10V	> 5V

Reg Value	Output Values	
	0 to 10V	4 to 20mA
0	0	4mA
1024	2.5V	8mA
2048	5V	12mA
3072	7.5V	16mA
4095	10V	20mA

Wiring:

<table>
<tr><td>Bidirectional Inputs (normal)
Note: X0, X1, X2, and X3 are high-speed</td><td>HSC: Single Phase Up</td></tr>
<tr><td> 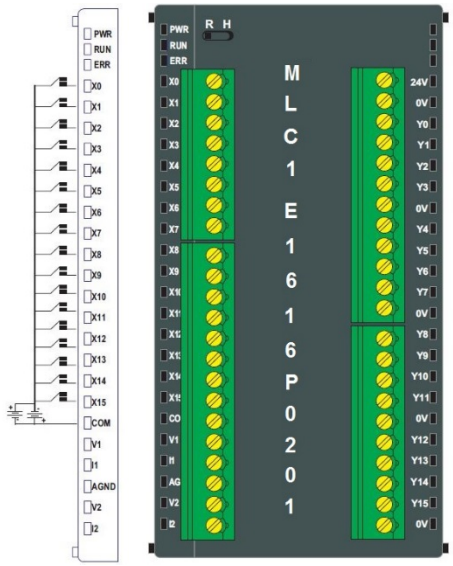 </td><td> 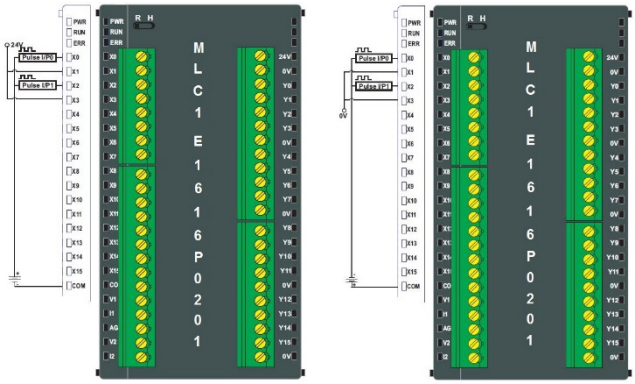 </td></tr>
<tr><td>HSC: Quadrature mode</td><td>HSC: Single Phase Down</td></tr>
<tr><td> 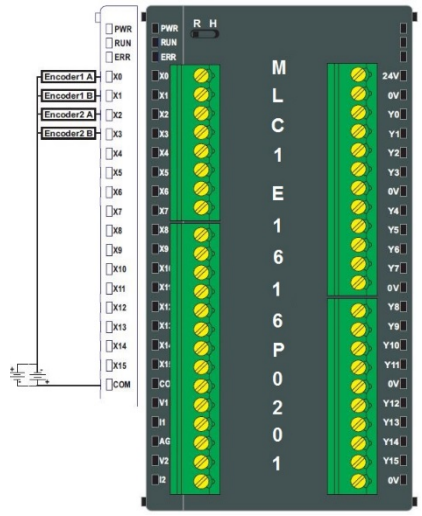 </td><td> 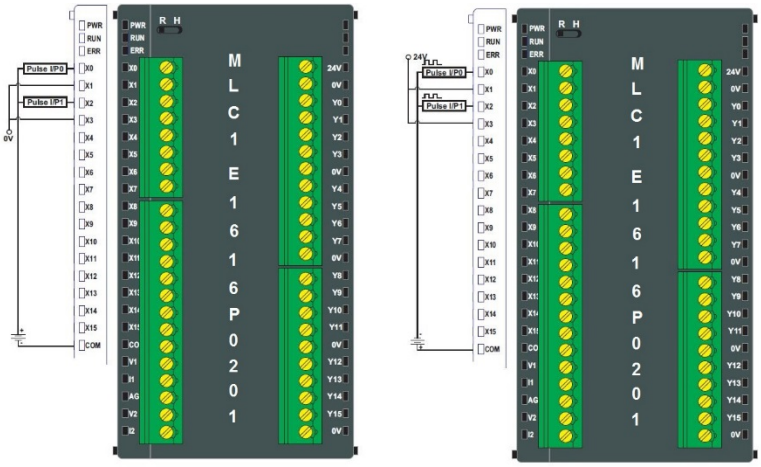 </td></tr>
</table>

Digital Outputs (normal)
Note: PWM mode use outputs Y0, Y1

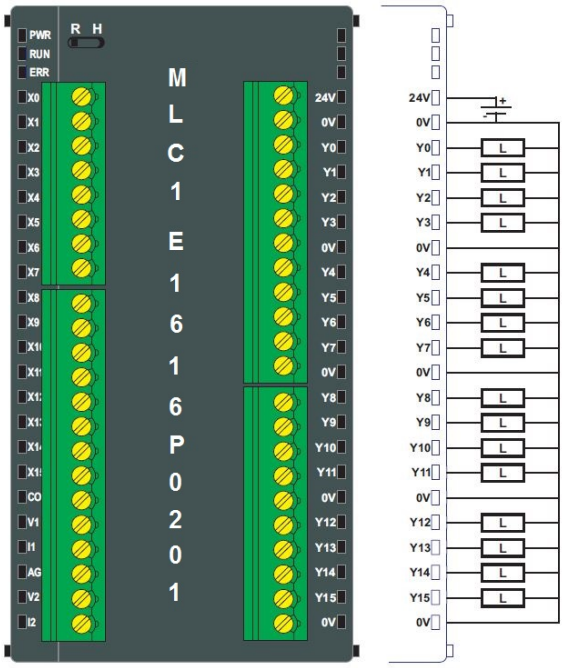

Analog Inputs (voltage)

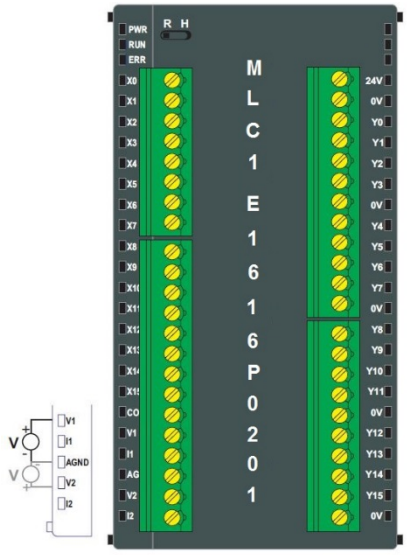

Analog Inputs (current)

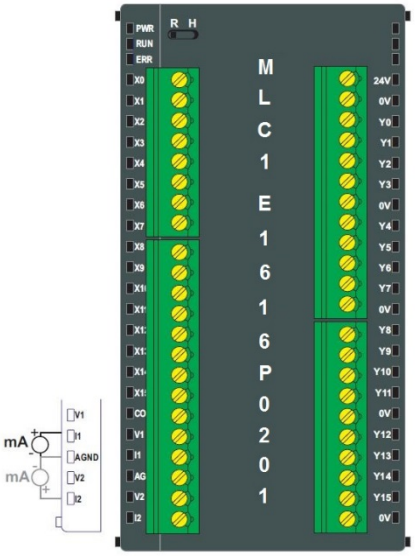

Analog Outputs (voltage)	Analog Outputs (current)
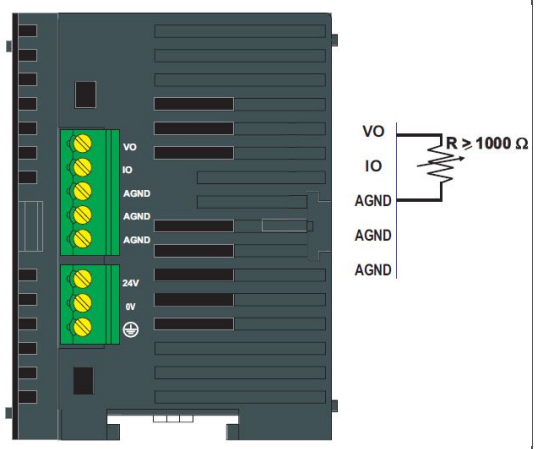	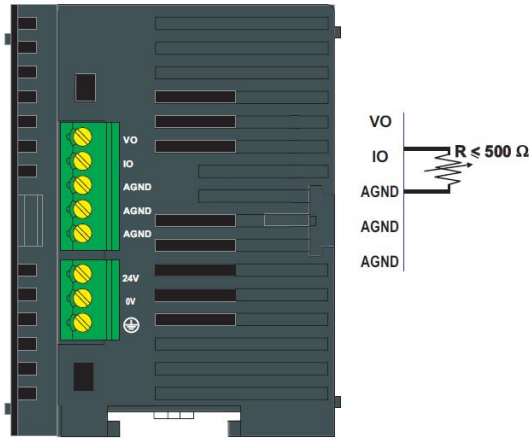

MLC1-E1616Y0201 (CPU w/ 16 Digital Input, 14 Relay & 2 Sourcing Output, 2 Analog Input, 1 Analog Output)

This expandable CPU module has sixteen bidirectional inputs, fourteen relay and two PNP digital outputs, two analog inputs, and one analog output. Four of the digital inputs can be configured for two high-speed counters (HSC) using the MW registers. When used as HSCs, inputs X0 & X1 (channel 1) and X2 & X3 (channel 2/3) are used to record incoming pulses. The two PNP outputs (Y0 and Y1) can be configured for Pulse Width Modulation (PWM). The two analog inputs support voltage and current mode and the analog output supports 0-10V voltage or 4-20mA current mode.

Up to sixteen MLE I/O expansion modules can be added to this CPU module.

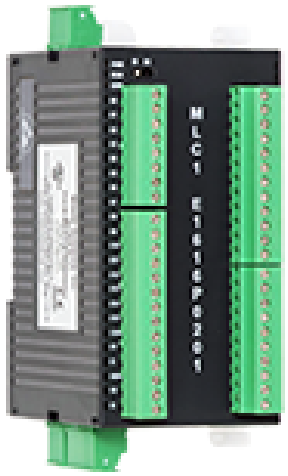

The specification below provides information about the inputs/outputs only. For more information regarding communications ports, etc. consult the data sheet.

Specifications:

Power	24VDC, 700mA (+20%; -15%)
Approvals	CE, UL
Connection method	Removable terminal (3.81 mm pitch)
Hardware	
Memory	90 KB Application Memory, 178 KB Ladder Memory
Serial	1 RS232; 1 RS485 2W
USB Slave	Upload/download projects
Digital Inputs	16 bidirectional inputs (4 high-speed X0, X1, X2, and X3)
Rated input voltage	24 VDC
Rated input current	5mA (typical)
Input impedance	3K ohms
Minimum ON voltage	15 VDC
Maximum ON voltage	30 VDC
Minimum OFF voltage	-3 VDC
Maximum OFF voltage	5 VDC
Turn ON Time	10 msec
Turn OFF Time	10 msec
Isolation	Optically isolated from internal circuit

High-Speed Counter (HSC) Mode	
No. of inputs	2 channels (X0/X1, and X2/X3) in Single Phase Up Counter mode or in Quadrature 4X mode
Physical reset inputs	X4 (channel 1) and X5 (channel 2)
Configurable forced outputs (opt)	Y2 (channel 1) and Y3 (channel 2)
Maximum Input Frequency (per channel)	200 KHz
Maximum Input Count	4,294,967,295 (32-bit) with 1 count register and 1 preset register per channel
Digital Outputs	14 relay, 2 sourcing outputs (PNP-type)
Output Capacity	250mA per output maximum
Rated load	250mA @ 30VDC
Nominal load	Relays: DC load: 12Ω 48W (resistive load)@24VDC 48VA (inductive load, UPF[Unity Power Factor]) AC load: 115Ω 460W (resistive load)@230VAC 460VA (inductive load, UPF) PNP: 96Ω 6W (resistive load)@24VDC 6VA (inductive load, UPF)
Minimum ON voltage output	22VDC (measured across load)
Maximum ON voltage output	30VDC (measure across load)
Minimum OFF voltage output	0.2VDC
Maximum OFF voltage output	1VDC
Short Circuit Protection	Yes
Pulse Width Modulation (PWM) Mode	
No. of Outputs	2 [Y0 (channel 1) and Y1 (channel 2)]
PWM frequency (variable)	200 KHz maximum
Analog Inputs	2 Inputs: • Voltage mode (0-10V, 0-5V) • Current mode (0-20mA, 4-20mA)
Resolution	16-bit
Accuracy	0.2% of full scale@25°C
Voltage Mode	
Input Range	0 to 10V, 0-5V
Input Impedance	1MΩ
Conversion cycle time (all channels)	760 msec. for 0-10V, 0-5V 670 msec. for 0-100mV, 0-50mV

Current Mode	
Input Range	0-20mA, 4-20mA
Input Impedance	100Ω
Conversion cycle time (all channels)	670 msec.
Analog Outputs	2 Outputs: • Voltage mode (0-10V) • Current mode (4 to 20mA)
Resolution	12-bit
Accuracy	0.2% of full scale@25°C
Voltage Mode	
Output Range	0 to 10VDC
Load Requirements	1000Ω minimum
Current Mode	
Output Range	4-20mA
Load Requirements	500Ω maximum
General	
Operating Temperature	0 to 55°C
Operating Humidity	10% to 90% (non-condensing)
Mechanical Dimension (LxWxH)	3.94x2.05x2.76 inches [100x52x70mm]

Configuration:

Use MAPware-7000 to assign input (X and XW), output (Y and YW) and configuration (M and MW) memory addresses to the module.

Function	Register		Access
X0-X15 Digital Inputs	X00000-15 (XW0000)		Read Only
Y0-Y15 Digital Outputs	Y00000-15 (YW0000)		Read/Write
Single Phase Up/Down Option	**HSC Channel 1**	**HSC Channel 2/3**	
HSC Input Pin	X0	X2	Read Only
Direction Pin (Count Up if ON, Down if OFF)	X1	X3	Read Only
Quadrature Inputs	**Pair 1**	**Pair 2**	
Counter Inputs	X0, X1	X2, X3	Read Only
Physical reset inputs	X4	X5	Read Only
HSC Configuration Register	MW0010	MW0040	Read/Write
HSC Counter Register (Current Value)	MW0011	MW0041	Read/Write
HSC Preset Register	MW0013	MW0043	Read/Write
HSC Enable Bit	M00240	M00720	Read/Write
HSC Reset Bit	M00241	M00721	Read/Write
HSC Preset Reached Bit	M00242	M00722	Read Only
Output Flag	Y2	Y3	Read/Write
PWM Outputs	**Channel 1**	**Channel 2**	
Output	Y0	Y1	Read Only
PWM Configuration Register	MW0059	MW0075	Read/Write
Frequency Setting Register	MW0060	MW0076	Read/Write
ON Duty Setting Register (Duty Cycle)	MW0062	MW0078	Read/Write
Pulse Enable Flag	M00816	M00832	Read/Write
ON Duty Setting Error Flag	M00818	M00834	Read Only
Frequency Setting Error Flag	M00819	M00835	Read Only
Analog Inputs	**Register**		
Input Channel 0 Data	XW0001		Read Only
Input Channel 1 Data	XW0003		Read Only
Input Channel 0 Config Register	MW0071		Read/Write
Input Channel 1 Config Register	MW0072		Read/Write
Analog Outputs	**Register**		
Output Channel 0 Data (Voltage)	YW0001		Read/Write
Output Channel 0 Data (Current)	YW0002		Read/Write
Output Channel 0 Config Register	MW0073		Read/Write

Reference the table below when configuring each HSC Configuration Register (MW0010 or MW0040):

Input Mode	Output Mode	Register Value
Normal Input (HSC not enabled)	N/A	0
High-Speed Single-Phase Counter, Up or Down based on Up/Down input	HW Done Bit Disabled	2
	HW Done output ON when preset is reached	258
	Done output ON when counter is enabled, OFF when preset is reached	770
Quadrature 4X	HW Done Bit Disabled	131
	HW Done output ON when preset is reached	387
	Done output ON when counter is enabled, OFF when preset is reached	899

Reference the table below when configuring the PWM Configuration Registers (MW0059 or MW0075):

Output Mode	Register Value
Normal PWM (fixed frequency)	1
Normal PWM (variable frequency)	2
CW/CCW (fixed frequency)	3
CW/CCW (variable frequency)	4
Pulse/Direction (fixed frequency)	7
Pulse/Direction (variable frequency)	8
Trapezoidal (Fixed Pulse Mode)	9

Reference the tables below when configuring each Analog Input (MW0071 or MW0072) and Output Configuration Register (MW0073):

Input Signal Type	Register Value
Voltage, 0 to 10V	1
Voltage, 0 to 5V	6
Current, 4 to 20mA	2
Current, 0 to 20mA	3

Output Signal Type	Register Value
Voltage, 0 to 10V	2
Current, 4 to 20mA	5

The values in the appropriate analog input register range from 0-64000, with over and under indications at 65000 and 65001, while analog output register values range from 0-4095.

Reg Value	Input Values			
	0 to 20mA	4 to 20mA	0 to 10V	0 to 5V
0	0mA	4mA	0V	0V
16000	5mA	8mA	2.5V	1.25V
32000	10mA	12mA	5V	2.5V
48000	15mA	16mA	7.5V	3.75V
64000	20mA	20mA	10V	5V
65000	< 0mA	< 4mA	< 0V	< 0V
65001	> 20mA	> 20mA	> 10V	> 5V

Reg Value	Output Values	
	0 to 10V	4 to 20mA
0	0	4mA
1024	2.5V	8mA
2048	5V	12mA
3072	7.5V	16mA
4095	10V	20mA

Wiring:

Bidirectional Inputs (normal) Note: X0, X1, X2, and X3 are high-speed	HSC: Single Phase Up
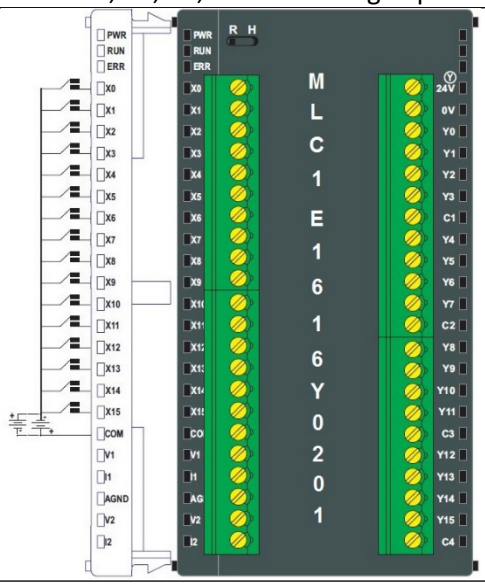	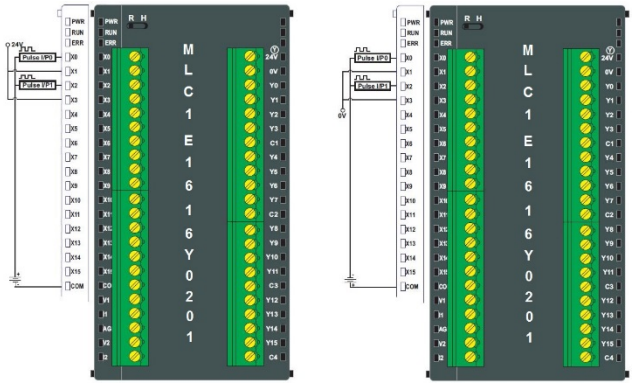
HSC: Quadrature mode	HSC: Single Phase Down
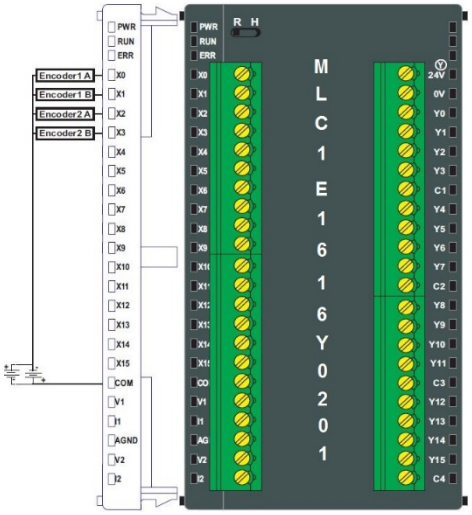	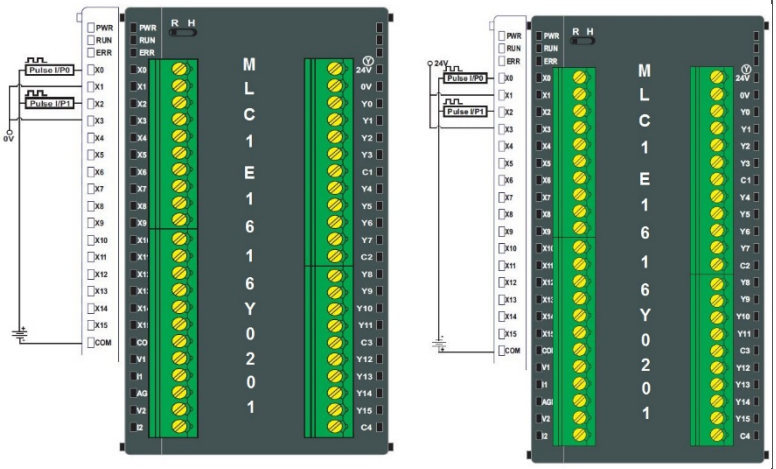

Digital Outputs (normal)
Note: PWM mode use outputs Y0, Y1

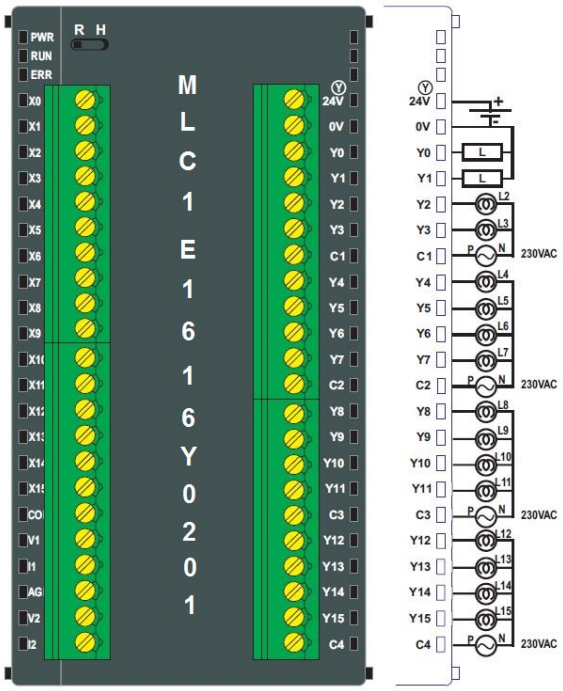

Analog Inputs (voltage)

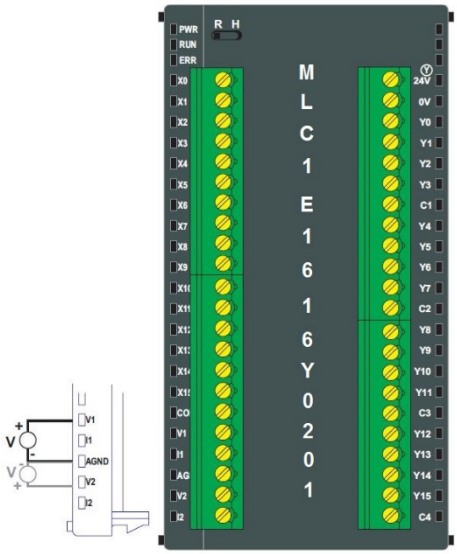

Analog Inputs (current)

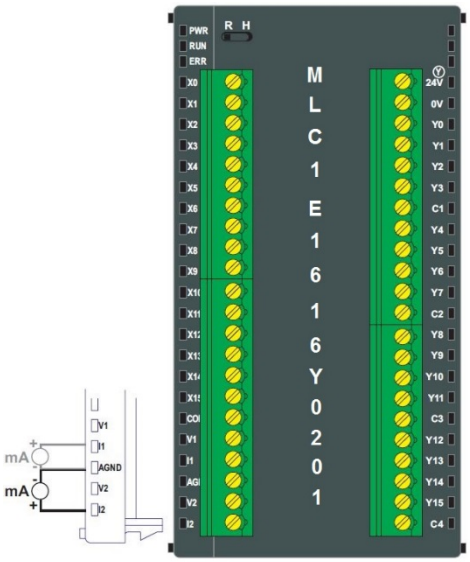

Analog Outputs (voltage)	Analog Outputs (current)
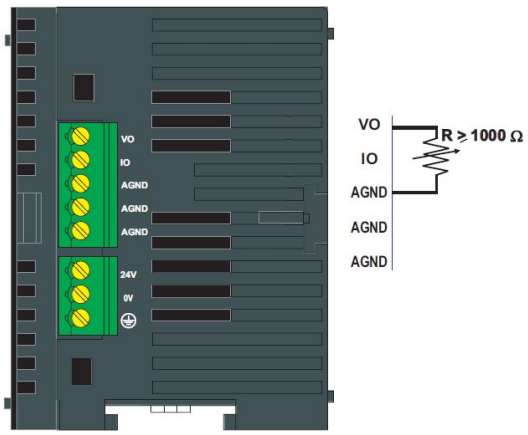	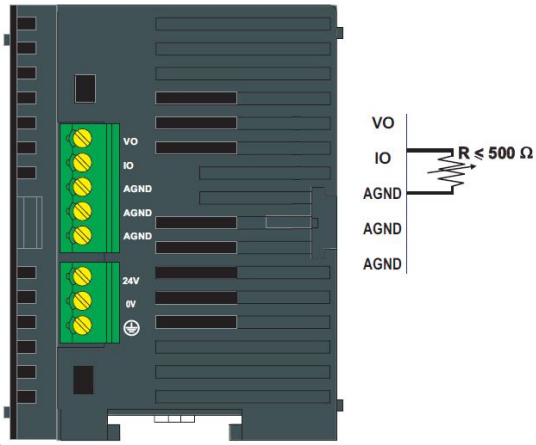

MLC2-E0404P0802T (CPU w/ 4 Digital Input, 4 Sourcing Output, 8 Analog Input, 2 Analog Output)

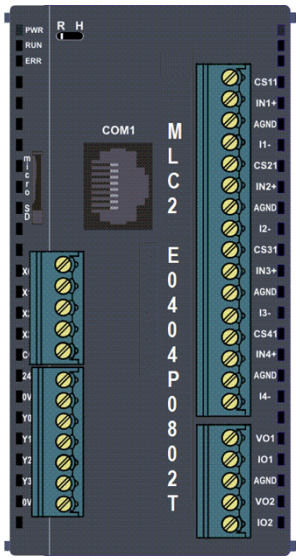

This expandable CPU module has four bidirectional inputs, four PNP digital outputs, eight analog inputs, and two analog outputs. The digital inputs can be configured for two high-speed counters (HSC) using the MW registers. When used as HSCs, inputs X0 & X1 (channel 1) and X2 & X3 (channel 2/3) are used to record incoming pulses. Two of the digital outputs (Y0 and Y1) can be configured for Pulse Width Modulation (PWM).

Four of the eight analog inputs support:

- 0-100 mV, 0-50mV, 0-10V, or 0-5V
- 0-20mA, or 4-20mA
- RTD PT-100 (Alpha1 or Alpha2)
- Thermocouple (Types J, K)

The additional four analog inputs support:

- 0-20mA, or 4-20mA

And 2 analog outputs, can deliver:

- 0-10V
- 4-20mA

Up to sixteen MLE I/O expansion modules can be added to this CPU module.

The specification below provides information about the inputs/outputs only. For more information regarding communications ports, etc. consult the data sheet.

Specifications:

Power	24VDC, 670mA (+/-15%)
Approvals	CE, UL
Connection method	Removable terminal (3.81 mm pitch)
Hardware	
Memory	192 KB Application Memory, 300 KB Ladder Memory
Ethernet	10/100 Mbps
Serial	1 RS232; 1 RS485 2W
USB Slave	Upload/download projects
SD Card	Data Storage
Digital Inputs	4 bidirectional inputs (4 high-speed X0, X1, X2, and X3)
Rated input voltage	24 VDC

Rated input current	5mA (typical)
Input impedance	3K ohms
Minimum ON voltage	15 VDC
Maximum ON voltage	30 VDC
Minimum OFF voltage	-3 VDC
Maximum OFF voltage	5 VDC
Turn ON Time	10 msec
Turn OFF Time	10 msec
Isolation	Optically isolated from internal circuit
High-Speed Counter (HSC) Mode	
No. of inputs	2 channels (X0/X1, and X2/X3) in Single Phase Up Counter mode or in Quadrature 4X mode
Configurable forced outputs	Y2 (channel 1) and Y3 (channel 2)
Maximum Input Frequency (per channel)	200 KHz
Maximum Input Count	4,294,967,295 (32-bit) with 1 count register and 1 preset register per channel
Digital Outputs	4 sourcing outputs (PNP-type)
Output Capacity	250mA per output maximum
Rated load	250mA @ 30VDC
Nominal load	PNP: 96Ω 6W (resistive load)@24VDC 6VA (inductive load, UPF)
Minimum ON voltage output	22VDC (measured across load)
Maximum ON voltage output	30VDC (measure across load)
Minimum OFF voltage output	0.2VDC
Maximum OFF voltage output	1VDC
Short Circuit Protection	Yes
Pulse Width Modulation (PWM) Mode	
No. of Outputs	2 [Y0 (channel 1) and Y1 (channel 2)]
PWM frequency (variable)	200 KHz maximum

Analog Inputs	4 Front-facing Inputs: • Voltage mode (0-10V, 0-5V, 0-100mV, 0-50mV) • Current mode (0-20mA, 4-20mA) • RTD PT100 (alpha1, alpha2) • Thermocouple (Type J, K)
	4 Bottom-facing Inputs: • Current mode (0-20mA, 4-20mA)
Resolution	16-bit
Accuracy	0.2% of full scale@25°C (voltage) 0.3% of full scale@25°C (current)
Voltage Mode	
Input Range	0 to 10V, 0-5V, 0-100mV, 0-50mV
Input Impedance	1MΩ
Conversion cycle time (all channels)	760 msec. for 0-10V, 0-5V
Current Mode	
Input Range	0-20mA, 4-20mA
Input Impedance	100Ω
Conversion cycle time (all channels)	670 msec.
Analog Outputs	2 Outputs (0-10V, 4 to 20mA)
Resolution	12-bit
Accuracy	0.2% of full scale@25°C
Voltage Mode	
Output Range	0 to 10VDC
Load Requirements	1000Ω minimum
Current Mode	
Output Range	4-20mA
Load Requirements	500Ω maximum
General	
Operating Temperature	0 to 55°C
Operating Humidity	10% to 90% (non-condensing)
Mechanical Dimension (LxWxH)	3.94x2.05x2.76 inches [100x52x70mm]

Configuration:

Use MAPware-7000 to assign input (X and XW), output (Y and YW) and configuration (M and MW) memory addresses to the module.

Function	Register		Access
X0-X3 Digital Inputs	X00000-3 (XW0000)		Read Only
Y0-Y3 Digital Outputs	Y00000-3 (YW0000)		Read/Write
Single Phase Up/Down Option	**HSC Channel 1**	**HSC Channel 2/3**	
HSC Input Pin	X0	X2	Read Only
Direction Pin (Count Up if ON, Down if OFF)	X1	X3	Read Only
Quadrature Inputs	**Pair 1**	**Pair 2**	
Counter Inputs	X0, X1	X2, X3	Read Only
HSC Configuration Register	MW0010	MW0040	Read/Write
HSC Counter Register (Current Value)	MW0011	MW0041	Read/Write
HSC Preset Register	MW0013	MW0043	Read/Write
HSC Enable Bit	M00240	M00720	Read/Write
HSC Reset Bit	M00241	M00721	Read/Write
HSC Preset Reached Bit	M00242	M00722	Read Only
Output Flag	Y2	Y3	Read/Write
PWM Outputs	**Channel 1**	**Channel 2**	
Output	Y0	Y1	Read Only
PWM Configuration Register	MW0059	MW0075	Read/Write
Frequency Setting Register	MW0060	MW0076	Read/Write
ON Duty Setting Register (Duty Cycle)	MW0062	MW0078	Read/Write
Pulse Enable Flag	M00816	M00832	Read/Write
ON Duty Setting Error Flag	M00818	M00834	Read Only
Frequency Setting Error Flag	M00819	M00835	Read Only
Analog Inputs	**Register**		
Input Channel 0 Data	XW0001		Read Only
Input Channel 1 Data	XW0003		Read Only
Input Channel 2 Data	XW0005		Read Only
Input Channel 3 Data	XW0007		Read Only
Input Channel 0 Config Register	MW0071		Read/Write
Input Channel 1 Config Register	MW0072		Read/Write
Input Channel 2 Config Register	MW0087		Read/Write
Input Channel 3 Config Register	MW0088		Read/Write
Linear (Analog Only) Input Channel 4 Data	XW0009		Read Only
Linear (Analog Only) Input Channel 5 Data	XW0011		Read Only
Linear (Analog Only) Input Channel 6 Data	XW0013		Read Only
Linear (Analog Only) Input Channel 7 Data	XW0015		Read Only
Linear Input Channel 4 Config Register	MW0094		Read/Write
Linear Input Channel 5 Config Register	MW0095		Read/Write
Linear Input Channel 6 Config Register	MW0096		Read/Write
Linear Input Channel 7 Config Register	MW0097		Read/Write

Analog Outputs	Register	
Output Channel 0 Data (Voltage)	YW0001	Read/Write
Output Channel 0 Data (Current)	YW0002	Read/Write
Output Channel 1 Data (Voltage)	YW0003	Read/Write
Output Channel 1 Data (Current)	YW0004	Read/Write
Output Channel 0 Config Register	MW0073	Read/Write
Output Channel 1 Config Register	MW0089	Read/Write

Reference the table below when configuring each HSC Configuration Register (MW0010 or MW0040):

Input Mode	Output Mode	Register Value
Normal Input (HSC not enabled)	N/A	0
High-Speed Single-Phase Counter, Up or Down based on Up/Down input	HW Done Bit Disabled	2
	HW Done output ON when preset is reached	258
	Done output ON when counter is enabled, OFF when preset is reached	770
Quadrature 4X	HW Done Bit Disabled	131
	HW Done output ON when preset is reached	387
	Done output ON when counter is enabled, OFF when preset is reached	899

Reference the table below when configuring the PWM Configuration Registers (MW0059 or MW0075):

Output Mode	Register Value
Normal PWM (fixed frequency)	1
Normal PWM (variable frequency)	2
CW/CCW (fixed frequency)	3
CW/CCW (variable frequency)	4
Pulse/Direction (fixed frequency)	7
Pulse/Direction (variable frequency)	8
Trapezoidal (Fixed Pulse Mode)	9

Reference the tables below when configuring each Analog Input (MW0071/72/87/88) and Output Configuration Registers (MW0073 or MW0089). Analog input channels 4-7 (MW0094/95/96/97) are analog linear inputs that may only be configured for 0-20mA or 4-20mA:

Input Signal Type	Register Value
Voltage, 0 to 10V	1
Voltage, 0 to 5V	6
Current, 4 to 20mA	2
Current, 0 to 20mA	3
0 to 100mV	4
0 to 50mV	5
0 to 5V	6
RTD PT100 Alpha1	7
RTD PT100 Alpha2	8
Thermocouple (Type J)	14
Thermocouple (Type K)	15

Output Signal Type	Register Value
Voltage, 0 to 10V	2
Current, 4 to 20mA	5

The values in the appropriate analog input register range from 0-64000, with over and under indications at 65000 and 65001, while analog output register values range from 0-4095.

Reg Value	Input Values					
	0 to 20mA	4 to 20mA	0 to 10V	0 to 5V	0 to 100mV	0 to 50mV
0	0mA	4mA	0V	0V	0	0
16000	5mA	8mA	2.5V	1.25V	25	12.5
32000	10mA	12mA	5V	2.5V	50	25
48000	15mA	16mA	7.5V	3.75V	75	37.5
64000	20mA	20mA	10V	5V	100	50
65000	< 0mA	< 4mA	< 0V	< 0V	< 0V	< 0V
65001	> 20mA	> 20mA	> 10V	> 5V	> 100mV	> 50mV

Reg Value	Output Values	
	0 to 10V	4 to 20mA
0	0	4mA
1024	2.5V	8mA
2048	5V	12mA
3072	7.5V	16mA
4095	10V	20mA

For RTD/Thermocouple

Digital Count Value = 10 * Temperature (in C)

The digital count value is in signed integer format. For example, if the temperature is 57.6 degrees C, the digital count in the XW register will be 578.

Wiring:

Bidirectional Inputs (normal) Note: X0, X1, X2, and X3 are high-speed	HSC: Single Phase Up
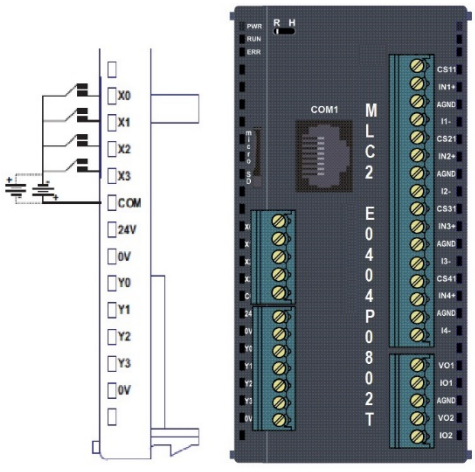	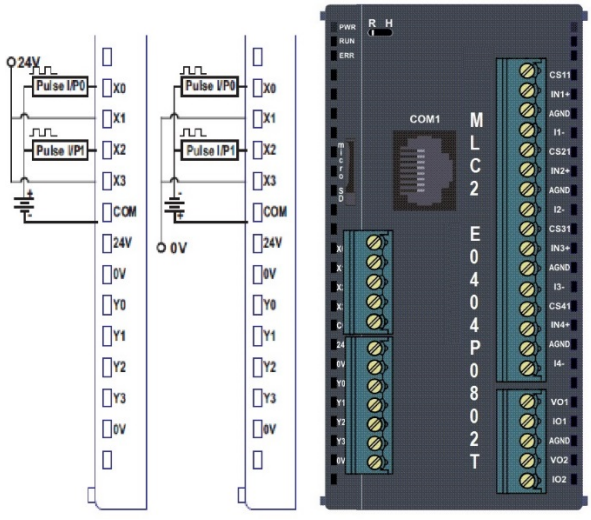

HSC: Quadrature mode	HSC: Single Phase Down
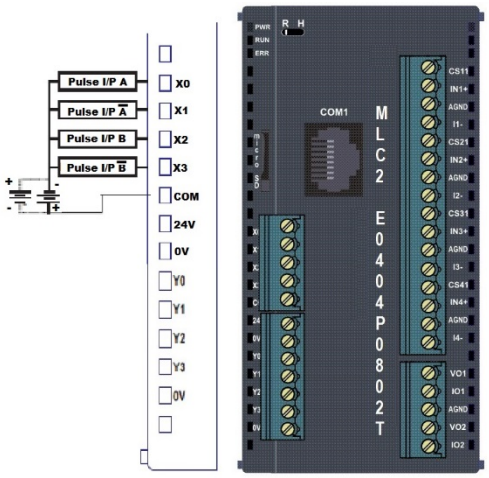	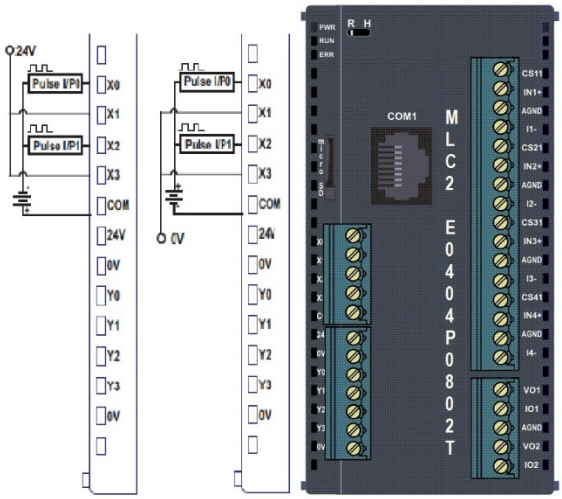
Digital Outputs (normal) Note: PWM mode use outputs Y0, Y1	
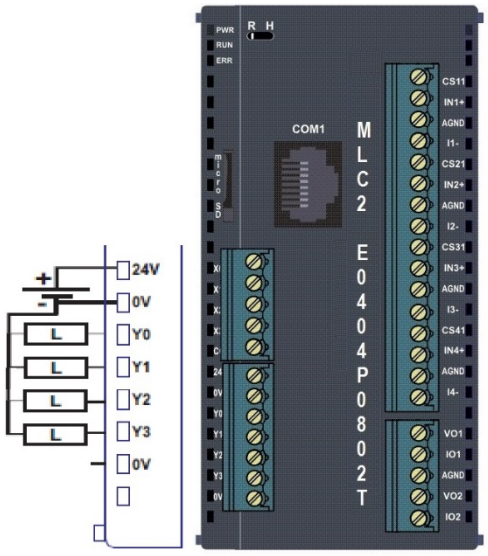	

Analog Inputs (voltage)	Analog Inputs (current)
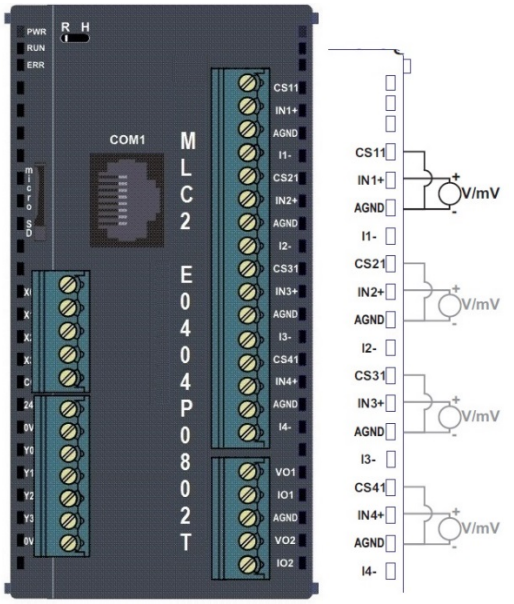	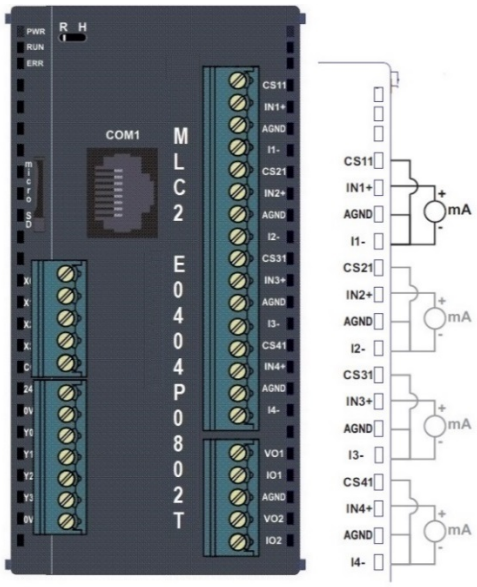
Analog Inputs (RTD)	**Analog Inputs (Thermocouple)**
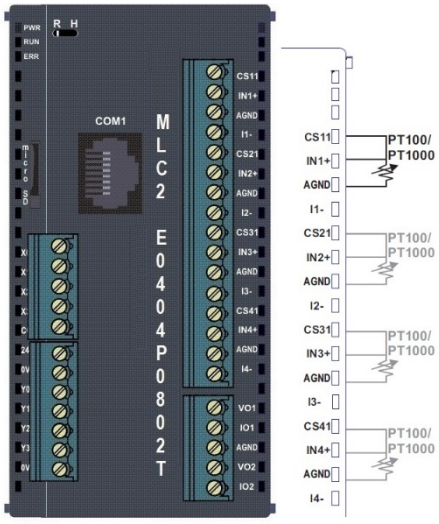	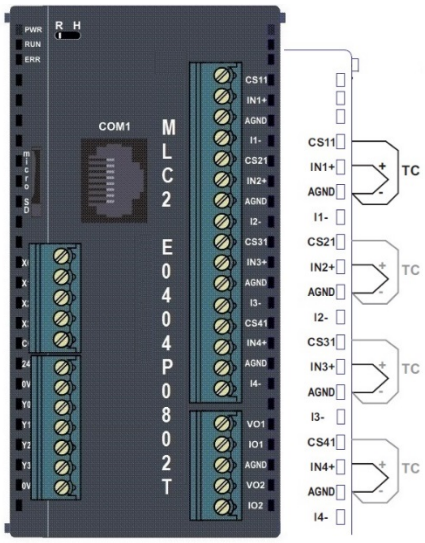

Analog Outputs (voltage)	Analog Outputs (current)
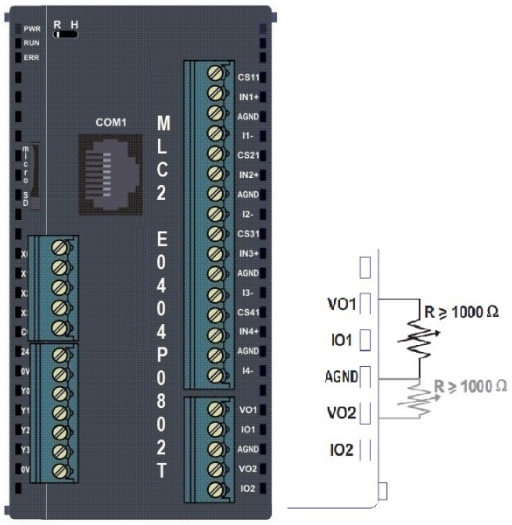	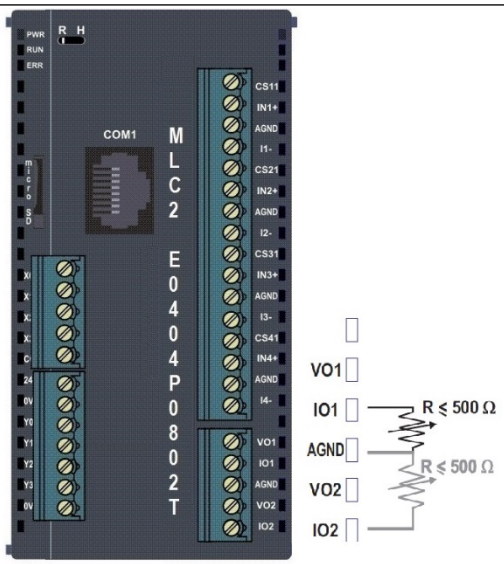

MLC3-E (CPU w/ no Built-in I/O)

This expandable CPU module has no built-in I/O but does support Ethernet and two serial ports. A USB Host port can be used for data storage and a mini USB Slave port is used for uploading/downloading projects. The unique feature of this model is the large memory which can be used for data storage, web screens, or complex application projects.

Up to sixteen MLE I/O expansion modules can be added to this CPU module.

For more information regarding hardware and communications ports, etc. consult the data sheet.

Specifications:

Power	24VDC, 670mA (+/-15%)
Approvals	CE, UL
Hardware	
Memory	22 MB Application Memory, 30 MB Ladder Memory
Ethernet	10/100 Mbps
Serial	1 RS232/RS485 4W; 1 RS485 2W
USB Slave	Upload/download projects (mini)
USB Host	Data Storage
General	
Operating Temperature	0 to 55°C
Operating Humidity	10% to 90% (non-condensing)
Mechanical Dimension (LxWxH)	3.94x1.38x2.76 inches [100x35x70mm]

EX-Series I/O Expansion Modules

MLE-D1600 (16 Digital Input Module)

This module is a digital input module for the expandable EX-Series PLC base units.

It has sixteen bidirectional inputs.

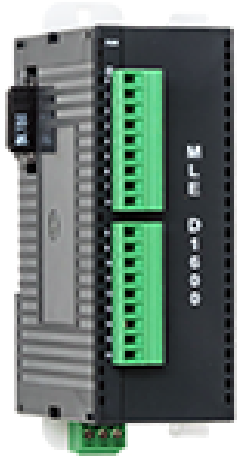

Specifications:

Power	3.75 VDC from MLC PLC base
Approvals	CE, UL
Digital Inputs	16 bidirectional inputs
Rated input current	Up to 5mA (per contact)
Input impedance	5.4K ohms
Minimum ON voltage	9.6 VDC
Maximum OFF voltage	3.6 VDC
Turn ON Time	10 msec
Turn OFF Time	10 msec
Isolation	Optically isolated from internal circuit
Connection method	Removable terminals (3.81 mm pitch)
General	
Operating Temperature	0 to 55°C
Operating Humidity	10% to 90% (non-condensing)
Mechanical Dimension (LxWxH)	3.94x1.38x2.76 inches [100x35x70mm]

Configuration:

Use MAPware-7000 to assign input (X and XW) memory addresses to the module. These addresses are created according to the slot location of the module, where **nn** refers to the slot number (ex. 01…16):

Function	Register	Access
X0-X15 Inputs	Xnn000-015 (XWnn00)	Read Only

Wiring:

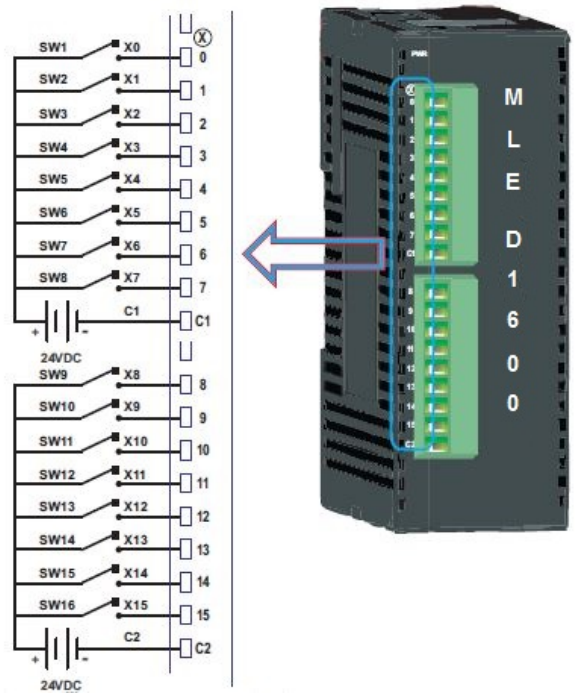

MLE-D0016N (16 Sinking Output Module)

This module is digital output module for the expandable EX-Series PLC base units.

It has sixteen sinking (NPN) outputs.

Specifications:

Power	3.75 VDC from MLC PLC base, max 80mA
Approvals	CE, UL
Digital Outputs	16 sinking (NPN) outputs, 8 points per common
Output Capacity	500mA per output maximum
Rated load	500mA @ 24VDC
Connection method	Removable terminals (3.81 mm pitch)
General	
Operating Temperature	0 to 55°C
Operating Humidity	10% to 90% (non-condensing)
Mechanical Dimension (LxWxH)	3.94x1.38x2.76 inches [100x35x70mm]

Configuration:

Use MAPware-7000 to assign output (Y and YW) memory addresses to the module. These addresses are created according to the slot location of the module, where **nn** refers to the slot number (ex. 01…16):

Function	Register	Access
Y0-Y15 Inputs	Ynn000-015 (YWnn00)	Read/Write

Wiring:

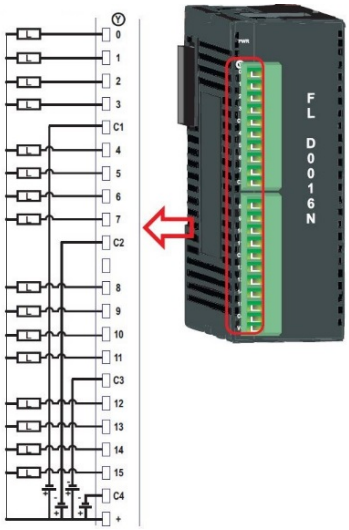

MLE-D0016P (16 Sourcing Output Module)

This module is a digital output module for the expandable EX-Series PLC base units.

It has sixteen sourcing (PNP) outputs.

Specifications:

Power	3.75 VDC from MLC PLC base
Approvals	CE, UL
Digital Outputs	16 sourcing (PNP) outputs
Output Capacity	500mA per output maximum
Rated load	300mA @ 24VDC
Connection method	Removable terminals (3.81 mm pitch)
General	
Operating Temperature	0 to 55°C
Operating Humidity	10% to 90% (non-condensing)
Mechanical Dimension (LxWxH)	3.94x1.38x2.76 inches [100x35x70mm]

Configuration:

Use MAPware-7000 to assign output (Y and YW) memory addresses to the module. These addresses are created according to the slot location of the module, where **nn** refers to the slot number (ex. 01…16):

Function	Register	Access
Y0-Y15 Inputs	Ynn000-015 (YWnn00)	Read/Write

Wiring:

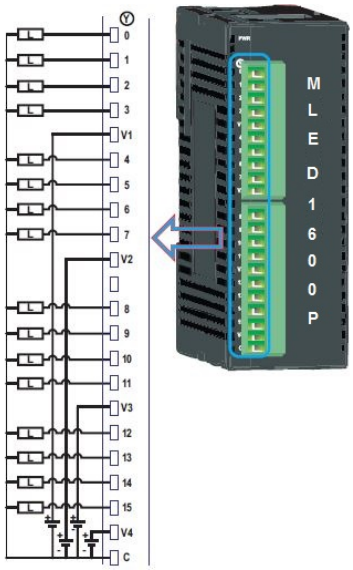

MLE-D0016R (16 Relay Output Module)

This module is digital output module for the expandable EX-Series PLC base units.

It has sixteen relay outputs.

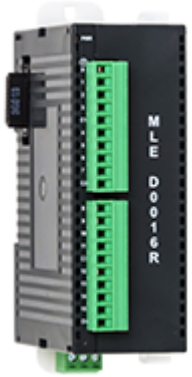

Specifications:

Power	3.75 VDC from MLC PLC base, max 80mA
Approvals	CE, UL
Digital Outputs	16 relay outputs, 8 points per common
Output Capacity	2A per contact, 6A per common
Rated load	500mA @ 24VDC
Resolution	12 bit
Connection method	Removable terminals (3.81 mm pitch)
General	
Operating Temperature	0 to 55°C
Operating Humidity	10% to 90% (non-condensing)
Mechanical Dimension (LxWxH)	3.94x1.38x2.76 inches [100x35x70mm]

Configuration:

Use MAPware-7000 to assign output (Y and YW) memory addresses to the module. These addresses are created according to the slot location of the module, where **nn** refers to the slot number (ex. 01…16):

Function	Register	Access
Y0-Y15 Inputs	Ynn000-015 (YWnn00)	Read/Write

Wiring:

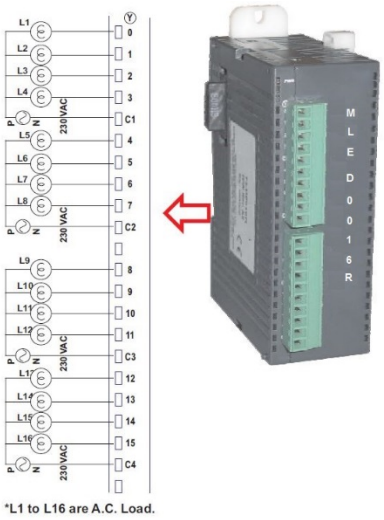

*L1 to L16 are A.C. Load.

MLE-D0808N (8 Digital Input, 8 Sinking Output Module)

This module is a digital input/output module for the expandable EX-Series PLC base units.

It has eight bidirectional inputs and eight sinking (NPN) digital outputs.

Specifications:

Power	3.75 VDC from MLC PLC base, max 80mA
Approvals	CE, UL
Digital Inputs	8 bidirectional inputs
Rated input voltage	24 VDC
Rated input current	Up to 5mA
Input impedance	5.4K ohms
Minimum ON voltage	9.6 VDC
Maximum OFF voltage	3.6 VDC
Turn ON Time	10 msec
Turn OFF Time	10 msec
Isolation	Optically isolated from internal circuit
Connection method	Removable terminal (3.81 mm pitch)
Digital Outputs	8 sinking outputs (NPN-type)
Output Capacity	500mA per output maximum
Rated load	500mA @ 24VDC
Connection method	Removable terminals (3.81 mm pitch)
General	
Operating Temperature	0 to 55°C
Operating Humidity	10% to 90% (non-condensing)
Mechanical Dimension (LxWxH)	3.94x1.38x2.76 inches [100x35x70mm]

Configuration:

Use MAPware-7000 to assign input (X and XW) memory addresses and output (Y and YW) memory addresses to the module. These addresses are created according to the slot location of the module, where **nn** refers to the slot number (ex. 01…05):

Function	Register	Access
X0-X7 Inputs	Xnn000-007 (XWnn00)	Read Only
Y0-Y7 Inputs	Ynn000-007 (YWnn00)	Read/Write

Wiring:

Bidirectional Inputs (normal)	Digital Outputs (normal)
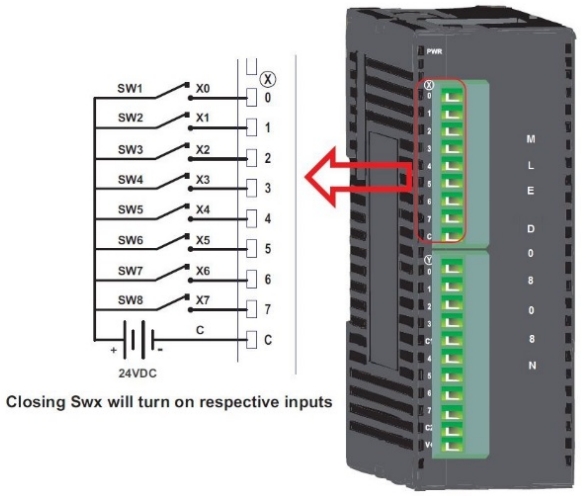	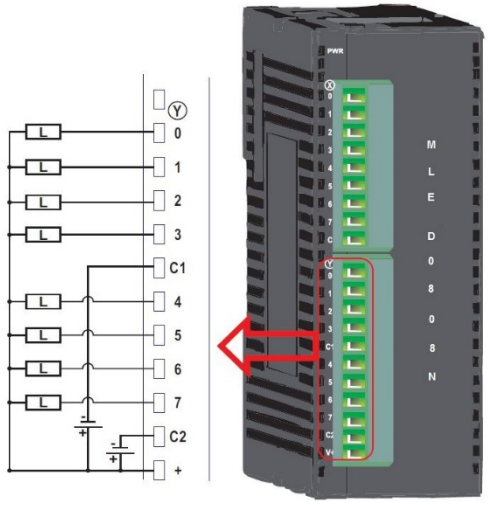

MLE-D0808P (8 Digital Input, 8 Sourcing Output Module)

This module is a digital input/output module for the expandable EX-Series PLC base units.

It has eight bidirectional inputs and eight sourcing (PNP) digital outputs.

Specifications:

Power	3.75 VDC from MLC PLC base, max 80mA
Approvals	CE, UL
Digital Inputs	8 bidirectional inputs
Rated input voltage	24 VDC
Rated input current	Up to 5mA
Input impedance	5.4K ohms
Minimum ON voltage	9.6 VDC
Maximum OFF voltage	3.6 VDC
Turn ON Time	10 msec
Turn OFF Time	10 msec
Isolation	Optically isolated from internal circuit
Connection method	Removable terminal (3.81 mm pitch)
Digital Outputs	8 sourcing outputs (PNP-type)
Output Capacity	500mA per output maximum
Rated load	500mA @ 24VDC
Connection method	Removable terminals (3.81 mm pitch)
General	
Operating Temperature	0 to 55°C
Operating Humidity	10% to 90% (non-condensing)
Mechanical Dimension (LxWxH)	3.94x1.38x2.76 inches [100x35x70mm]

Configuration:

Use MAPware-7000 to assign input (X and XW) memory addresses and output (Y and YW) memory addresses to the module. These addresses are created according to the slot location of the module, where **nn** refers to the slot number (ex. 01…05):

Function	Register	Access
X0-X7 Inputs	Xnn000-007 (XWnn00)	Read Only
Y0-Y7 Inputs	Ynn000-007 (YWnn00)	Read/Write

Wiring:

Bidirectional Inputs (normal)	Digital Outputs (normal)
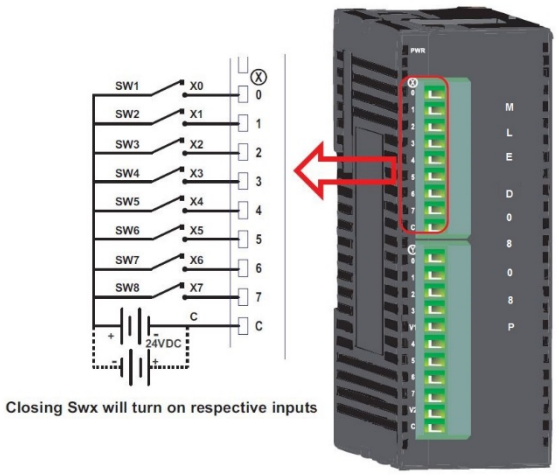	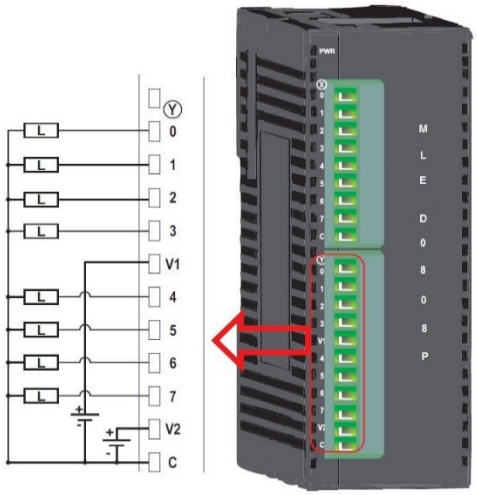

MLE-D0808R (8 Digital Input, 8 Relay Output Module)

This module is a digital input/output module for the expandable EX-Series PLC base units.

It has eight bidirectional inputs and eight relay digital outputs.

Specifications:

Power	3.75 VDC from MLC PLC base, max 80mA
Approvals	CE, UL
Digital Inputs	8 bidirectional inputs
Rated input voltage	24 VDC
Rated input current	Up to 5mA
Input impedance	5.4K ohms
Minimum ON voltage	9.6 VDC
Maximum OFF voltage	3.6 VDC
Turn ON Time	10 msec
Turn OFF Time	10 msec
Isolation	Optically isolated from internal circuit
Connection method	Removable terminal (3.81 mm pitch)
Digital Outputs	8 relay outputs (Form A)
Output Capacity	2A per output maximum, 8A per common
Rated load	2A @ 230VAC or 2A @ 30VDC
Connection method	Removable terminals (3.81 mm pitch)
General	
Operating Temperature	0 to 55°C
Operating Humidity	10% to 90% (non-condensing)
Mechanical Dimension (LxWxH)	3.94x1.38x2.76 inches [100x35x70mm]

Configuration:

Use MAPware-7000 to assign input (X and XW) memory addresses and output (Y and YW) memory addresses to the module. These addresses are created according to the slot location of the module, where **nn** refers to the slot number (ex. 01…05):

Function	Register	Access
X0-X7 Inputs	Xnn000-007 (XWnn00)	Read Only
Y0-Y7 Inputs	Ynn000-007 (YWnn00)	Read/Write

Wiring:

Bidirectional Inputs (normal)	Digital Outputs (normal)
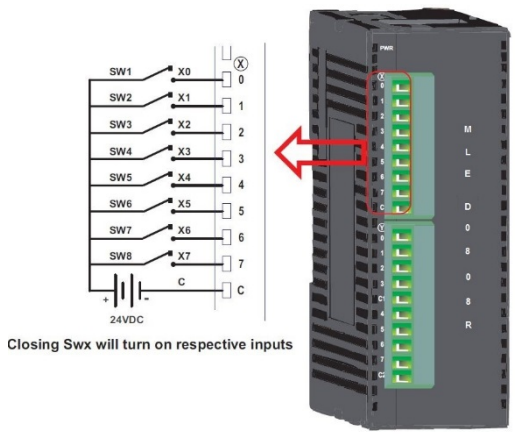	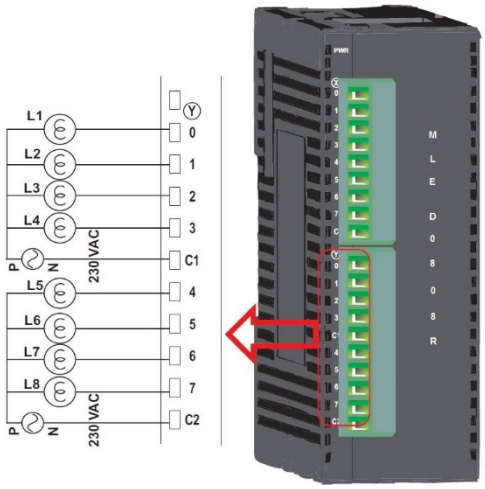

MLE-D0808NH (8 Digital Inputs-4 high-speed, 8 Sinking Output-2 PWM Module)

This module is a high-speed digital input/output module for the expandable EX-Series PLC base units. It has eight bidirectional inputs and eight sinking digital outputs. Four of the inputs can be configured as high-speed counters (HSC) in Single Phase Up Counter mode or Quadrature 1X/2X/4X mode using the MW registers.

When used as HSCs, inputs X0 (channel 1), X5 (channel 2), X2 (channel 3), and X7 (channel 4) are used to record incoming pulses.

Two of the outputs (Y0 and Y1) can be configured for Pulse Width Modulation (PWM).

Specifications:

Power	3.75 VDC from MLC PLC base, max 100mA
Approvals	CE, UL
Connection method	Removable terminal (3.81 mm pitch)
Digital Inputs	8 bidirectional inputs (4 high-speed X0, X5, X2 and X7)
Rated input voltage	24 VDC
Rated input current	5mA (typical)
Input impedance	4.7K ohms
Minimum ON voltage	15 VDC
Maximum ON voltage	30 VDC
Minimum OFF voltage	-3 VDC
Maximum OFF voltage	5 VDC
Turn ON Time	10 msec
Turn OFF Time	10 msec
Isolation	Optically isolated from internal circuit
High-Speed Counter (HSC) Mode	
No. of inputs	4 channels (X0, X5, X2, X7) in Single Phase Up Counter mode or 2 channels (X0/X5 and X2/X7) in Quadrature mode
Physical reset inputs	X1, X6, X3, and X4 in Single Phase Up Counter mode X1, X3 in Quadrature mode
Configurable forced outputs	Y1, Y6, Y7, and Y0 in Single Phase Up Counter mode Y1 and Y7 in Quadrature mode

Maximum Input Frequency (per channel)	25 KHz in Single Phase Up Counter mode 20 KHz in Quadrature mode[1]
Maximum Input Count	4,294,967,295 (32-bit) with 1 count register and 1 preset register per channel
Digital Outputs	8 sinking outputs (NPN-type) with 2 high-speed
Output Capacity	500mA per output maximum
Rated load per channel	500mA @ 24VDC (300mA for high-speed outputs)
Nominal Load	Ohmic - 48Ω @ 12W Lamp- 12 W Inductive- 12 VA (1.2H, 50Ω)
Switching frequency for inductive nominal load	0.5 Hz maximum
Minimum ON voltage	22 VDC
Maximum ON voltage	24 VDC
Minimum OFF voltage	0.2 VDC
Maximum OFF voltage	1 VDC
Isolation	Optically isolated from internal circuit (Breakdown Voltage= 3 KV)
Short Circuit protection	Auto protection for the 6 normal outputs
Pulse Width Modulation (PWM) Mode	
No. of Outputs	2 [Y2 (channel 1) and Y4 (channel 2)]
PWM frequency (variable)	10 KHz maximum
General	
Operating Temperature	0 to 55°C
Operating Humidity	10% to 90% (non-condensing)
Mechanical Dimension (LxWxH)	3.94x1.38x2.76 inches [100x35x70mm]
Input Power Supply	
Input Voltage	24 VDC
Input Current	120mA typical, up to 3.72A maximum (worst case scenario, when maximum load supplied on all digital outputs)

1- When using Quadrature Counter mode, if both channels are used simultaneously, then the maximum input frequency is 5 KHz. If input frequency > 5 KHz (20 KHz max), then set as single pair using X2 and X7.

2- When using Normal Mode for PWM, the frequency output on both channels will be the same. However, the duty cycle can vary.

Configuration:

Use MAPware-7000 to assign input (X and XW) memory addresses, output (Y and YW) memory addresses, and configuration (MW) memory addresses to the module. These addresses are created according to the slot location of the module, where **nn** refers to the slot number (ex. 01…16):

Function	**Register**				**Access**
X0-X7 Inputs	Xnn000-007 (XWnn00)				Read Only
Y0-Y7 Inputs	Ynn000-007 (YWnn00)				Read/Write
High-Speed Counters	**Channel 1**	**Channel 2**	**Channel 3**	**Channel 4**	
HSC Input Pin	X0	X5	X2	X7	Read Only
Quadrature Inputs	**Pair 1**		**Pair 2**		
Counter Inputs	X0, X5		X2, X7		Read Only
HSC Configuration Register (H1-4)	MWnn10	MWnn14	MWnn18	MWnn22	Read/Write
HSC Counter Value (C1-4)	XWnn04	XWnn06	XWnn08	XWnn10	Read Only
HSC Preset Register (P1-4)	MWnn11	MWnn15	MWnn19	MWnn23	Read/Write
HSC Enable Bit (E1-4)	Mnn208	Mnn272	Mnn336	Mnn400	Read/Write
HSC Reset Bit (R1-4)	Mnn209	Mnn273	Mnn337	Mnn401	Read/Write
HSC Preset Reached/Done (PR1-4)	XWnn048	XWnn049	XWnn050	XWnn051	Read Only
Hardware Done Output	Y1	Y6	Y7	Y0	Read/Write
PWM Outputs	**Channel 1**		**Channel 2**		
Output	Y0		Y1		Read Only
PWM Configuration Register	MWnn00		MWnn23		Read/Write
Frequency Setting Register	MWnn02		N/A		Read/Write
ON Duty Setting Register (Duty Cycle)	MWnn04		MWnn27		Read/Write
Pulse Enable Flag (PE1-2)	Mnn016		Mnn018		Read/Write
Direction Marker	Mnn017		N/A		Read/Write
ON Duty Setting Error Flag	Xnn062		Xnn061		Read Only
Frequency Setting Error Flag	Xnn063		N/A		Read Only

Reference the table below when configuring each HSC Configuration Register (MW**nn**10, MW**nn**14, MW**nn**18, or MW**nn**22):

Input Mode	**Output Mode**	**Register Value**
Normal Input (HSC not enabled)	N/A	0
High-Speed Single Phase UP Counter	HW Done output ON when preset is reached	2
	HW Done output ON when counter is enabled, OFF when preset is reached	258
Quadrature 1X	HW Done output ON when preset is reached	3
	HW Done output ON when counter is enabled, OFF when preset is reached	259
Quadrature 2X	HW Done output ON when preset is reached	67
	HW Done output ON when counter is enabled, OFF when preset is reached	323
Quadrature 4X	HW Done output ON when preset is reached	131
	HW Done output ON when counter is enabled, OFF when preset is reached	387

Reference the table below when configuring the PWM Configuration Registers (MW**nn**00 or MW**nn**23):

Output Mode	Register Value
Normal PWM (fixed frequency)	1
CW/CCW (variable frequency)	3
Pulse/Direction (variable frequency)	7
Trapezoidal (Fixed Pulse Mode)	9

Wiring:

Bidirectional Inputs (normal)	High-Speed Counter
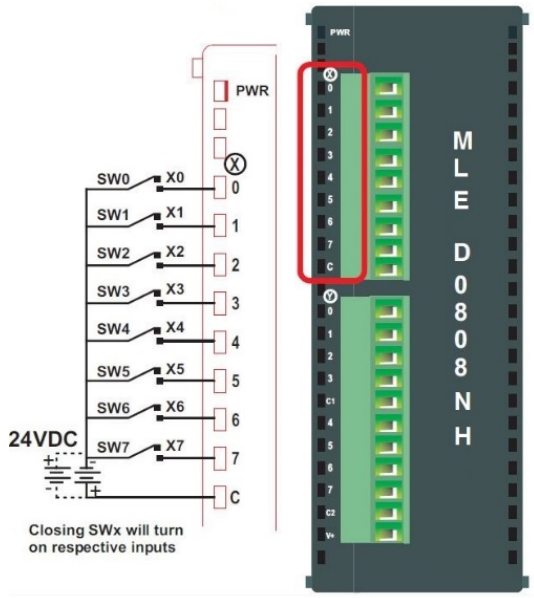	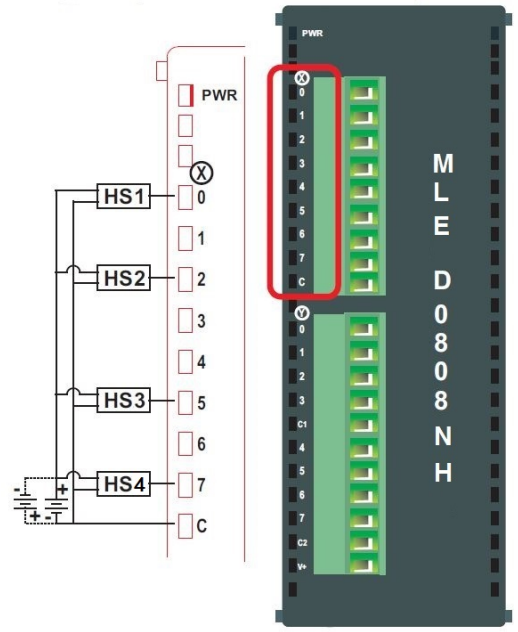
Digital Outputs (normal)	**Outputs (PWM mode)**
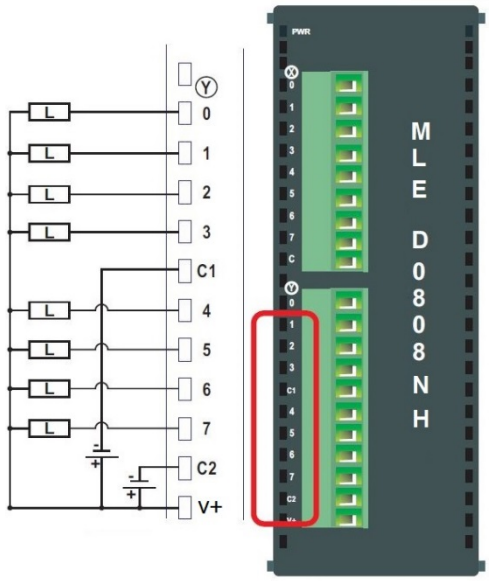	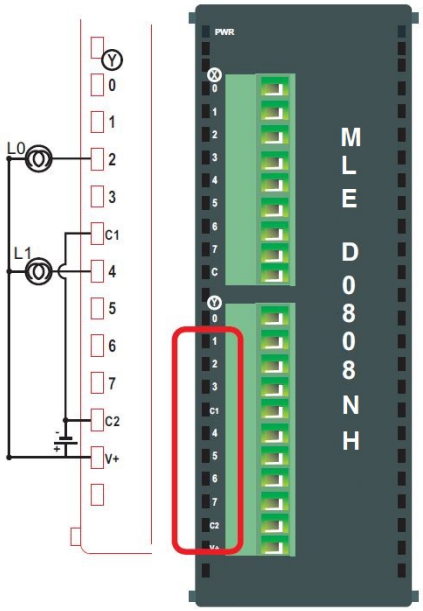

MLE-D0808PH (8 Digital Inputs-4 high-speed, 8 Sourcing Output-2 PWM Module)

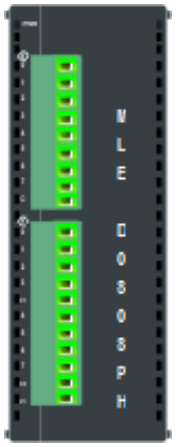

This module is a high-speed digital input/output module for the expandable EX-Series PLC base units. It has eight bidirectional inputs and eight sourcing digital outputs. Four of the inputs can be configured as high-speed counters (HSC) in Single Phase Up Counter mode or two Quadrature 1X/2X/4X mode counters using the MW registers.

When used as HSCs, inputs X0 (channel 1), X5 (channel 2), X2 (channel 3), and X7 (channel 4) are used to record incoming pulses.

Two of the outputs (Y0 and Y1) can be configured for Pulse Width Modulation (PWM).

Specifications:

Power	3.75 VDC from MLC PLC base, max 100mA
Approvals	CE, UL
Connection method	Removable terminal (3.81 mm pitch)
Digital Inputs	8 bidirectional inputs (4 high-speed X0, X5, X2 and X7)
Rated input voltage	24 VDC
Rated input current	5mA (typical)
Input impedance	4.7K ohms
Minimum ON voltage	15 VDC
Maximum ON voltage	30 VDC
Minimum OFF voltage	-3 VDC
Maximum OFF voltage	5 VDC
Turn ON Time	10 msec
Turn OFF Time	10 msec
Isolation	Optically isolated from internal circuit
High-Speed Counter (HSC) Mode	
No. of inputs	4 channels (X0, X5, X2, X7) in Single Phase Up Counter mode or 2 channels (X0/X5 and X2/X7) in Quadrature mode
Physical reset inputs	X1, X6, X3, and X4 in Single Phase Up Counter mode X1, X3 in Quadrature mode
Configurable forced outputs	Y1, Y6, Y7, and Y0 in Single Phase Up Counter mode Y1 and Y7 in Quadrature mode

Maximum Input Frequency (per channel)	25 KHz in Single Phase Up Counter mode 20 KHz in Quadrature mode[1]
Maximum Input Count	4,294,967,295 (32-bit) with 1 count register and 1 preset register per channel
Digital Outputs	8 sinking outputs (NPN-type) with 2 high-speed
Output Capacity	500mA per output maximum
Rated load per channel	500mA @ 24VDC (250mA for high-speed outputs)
Nominal Load	Ohmic - 48Ω @ 12W Lamp- 12 W Inductive- 12 VA (1.2H, 50Ω)
Switching frequency for inductive nominal load	0.5 Hz maximum
Minimum ON voltage	22 VDC
Maximum ON voltage	24 VDC
Minimum OFF voltage	0.2 VDC
Maximum OFF voltage	1 VDC
Isolation	Optically isolated from internal circuit (Breakdown Voltage= 3 KV)
Short Circuit protection	Auto protection for the 6 normal outputs
Pulse Width Modulation (PWM) Mode	
No. of Outputs	2 [Y2 (channel 1) and Y4 (channel 2)]
PWM frequency (variable)	10 KHz maximum
General	
Operating Temperature	0 to 55°C
Operating Humidity	10% to 90% (non-condensing)
Mechanical Dimension (LxWxH)	3.94x1.38x2.76 inches [100x35x70mm]
Input Power Supply	
Input Voltage	24 VDC
Input Current	120mA typical, up to 3.72A maximum (worst case scenario, when maximum load supplied on all digital outputs)

1- When using Quadrature Counter mode, if both channels are used simultaneously, then the maximum input frequency is 5 KHz. If input frequency > 5 KHz (20 KHz max), then set as single pair using X2 and X7.

2- When using Normal Mode for PWM, the frequency output on both channels will be the same. However, the duty cycle can vary.

Configuration:

Use MAPware-7000 to assign input (X and XW) memory addresses, output (Y and YW) memory addresses, and configuration (MW) memory addresses to the module. These addresses are created according to the slot location of the module, where **nn** refers to the slot number (ex. 01…16):

Function	**Register**				**Access**
X0-X7 Inputs	Xnn000-007 (XWnn00)				Read Only
Y0-Y7 Inputs	Ynn000-007 (YWnn00)				Read/Write
High-Speed Counters	**Channel 1**	**Channel 2**	**Channel 3**	**Channel 4**	
HSC Input Pin	X0	X5	X2	X7	Read Only
Quadrature Inputs	**Pair 1**		**Pair 2**		
Counter Inputs	X0, X5		X2, X7		Read Only
HSC Configuration Register (H1-4)	MWnn10	MWnn14	MWnn18	MWnn22	Read/Write
HSC Counter Value (C1-4)	XWnn04	XWnn06	XWnn08	XWnn10	Read Only
HSC Preset Register (P1-4)	MWnn11	MWnn15	MWnn19	MWnn23	Read/Write
HSC Enable Bit (E1-4)	Mnn208	Mnn272	Mnn336	Mnn400	Read/Write
HSC Reset Bit (R1-4)	Mnn209	Mnn273	Mnn337	Mnn401	Read/Write
HSC Preset Reached/Done (PR1-4)	XWnn048	XWnn049	XWnn050	XWnn051	Read Only
Hardware Done Output	Y1	Y6	Y7	Y0	Read/Write
PWM Outputs	**Channel 1**		**Channel 2**		
Output	Y0		Y1		Read Only
PWM Configuration Register	MWnn00		MWnn23		Read/Write
Frequency Setting Register	MWnn02		N/A		Read/Write
ON Duty Setting Register (Duty Cycle)	MWnn04		MWnn27		Read/Write
Pulse Enable Flag (PE1-2)	Mnn016		Mnn018		Read/Write
Direction Marker	Mnn017		N/A		Read/Write
ON Duty Setting Error Flag	Xnn062		Xnn061		Read Only
Frequency Setting Error Flag	Xnn063		N/A		Read Only

Reference the table below when configuring each HSC Configuration Register (MW**nn**10, MW**nn**14, MW**nn**18, or MW**nn**22):

Input Mode	**Output Mode**	**Register Value**
Normal Input (HSC not enabled)	N/A	0
High-Speed Single Phase UP Counter	HW Done output ON when preset is reached	2
	HW Done output ON when counter is enabled, OFF when preset is reached	258
Quadrature 1X	HW Done output ON when preset is reached	3
	HW Done output ON when counter is enabled, OFF when preset is reached	259
Quadrature 2X	HW Done output ON when preset is reached	67
	HW Done output ON when counter is enabled, OFF when preset is reached	323
Quadrature 4X	HW Done output ON when preset is reached	131
	HW Done output ON when counter is enabled, OFF when preset is reached	387

Reference the table below when configuring the PWM Configuration Registers (MW**nn**00 or MW**nn**23):

Output Mode	Register Value
Normal PWM (fixed frequency)	1
CW/CCW (variable frequency)	3
Pulse/Direction (variable frequency)	7
Trapezoidal (Fixed Pulse Mode)	9

Wiring:

Bidirectional Inputs (normal)	High-Speed Counter
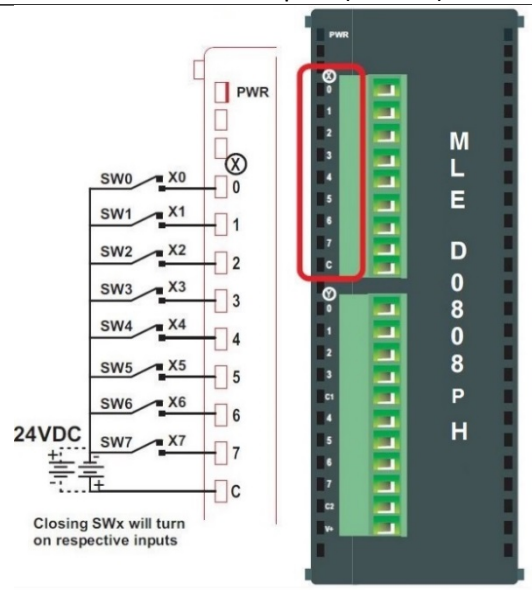	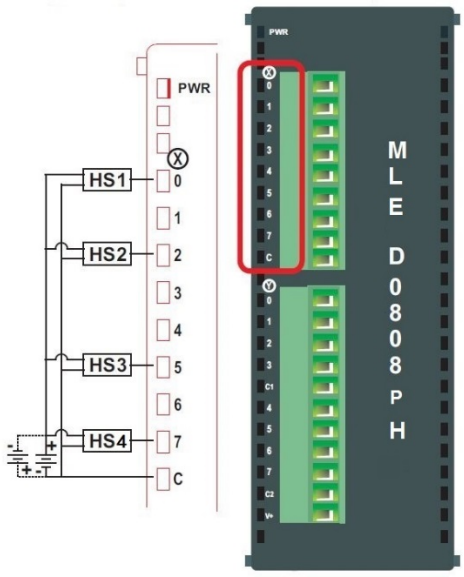
Digital Outputs (normal)	**Outputs (PWM mode)**
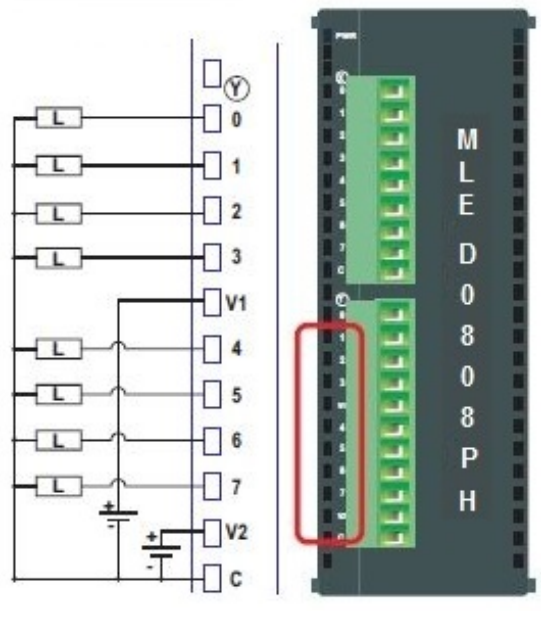	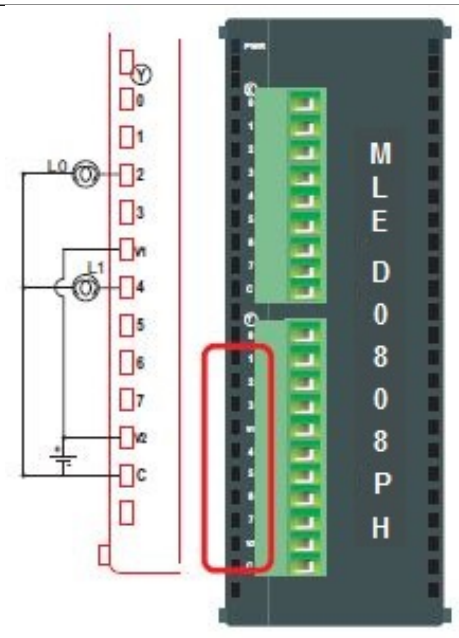

MLE-A0800 (8 Analog Input Module)

This module is an analog input module for the expandable EX-Series PLC base units.

It has 8 analog inputs, which can measure 0-10V, and 4-20mA signals.

Specifications:

Power	3.75 VDC from MLC PLC base, up to 80mA
Approvals	CE, UL
Analog Inputs	8 Inputs (0-10V, 4 to 20mA)
Resolution	16 bit
Connection method	Removable terminals (3.81 mm pitch)
Accuracy	At 25°C: 0.2% of full scale
Non-linearity	0.04% max.
Temperature Drift	60 ppm
Voltage Mode	
Input Range	0 to 10VDC
Data Output	For 0-10V: 0.153mV Voltage Input (V) / Value 0 / 0 2.5 / 16384 5 / 32768 7.5 / 49152 10 / 65535
Input Impedance	470KΩ
Conversion cycle time (all channels)	1370 msec.
Current Mode	
Input Range	4-20mA

<table>
<tr><td>Data Output</td><td>For 4-20mA: .2441µA<table><tr><td>Current Input (mA)</td><td>Value</td></tr><tr><td>4</td><td>0</td></tr><tr><td>8</td><td>16384</td></tr><tr><td>12</td><td>32768</td></tr><tr><td>16</td><td>49152</td></tr><tr><td>20</td><td>65535</td></tr></table></td></tr>
<tr><td>Input Impedance</td><td>100Ω</td></tr>
<tr><td>Conversion cycle time (all channels)</td><td>1050 msec.</td></tr>
<tr><td colspan="2">General</td></tr>
<tr><td>Operating Temperature</td><td>0 to 55°C</td></tr>
<tr><td>Storage Temperature</td><td>-20 to 85°C</td></tr>
<tr><td>Operating Humidity</td><td>10% to 90% (non-condensing)</td></tr>
<tr><td>Mechanical Dimension (LxWxH)</td><td>3.94x1.38x2.76 inches [100x35x70mm]</td></tr>
<tr><td colspan="2">Input Power Supply</td></tr>
<tr><td>Input Voltage</td><td>24VDC</td></tr>
<tr><td>Input Current</td><td>100mA maximum</td></tr>
</table>

Configuration:

Use MAPware-7000 to assign input (XW) and configuration (MW) memory addresses to the module. These addresses are created according to the slot location of the module, where **nn** refers to the slot number (ex. 01…16):

Register	Description	Access
XWnn00-07	Input Channel 1-8 Data	Read Only
MWnn08	Input Channel 1 Configuration Register	Read/Write
MWnn12	Input Channel 2 Configuration Register	Read/Write
MWnn16	Input Channel 3 Configuration Register	Read/Write
MWnn20	Input Channel 4 Configuration Register	Read/Write
MWnn24	Input Channel 5 Configuration Register	Read/Write
MWnn28	Input Channel 6 Configuration Register	Read/Write
MWnn32	Input Channel 7 Configuration Register	Read/Write
MWnn36	Input Channel 8 Configuration Register	Read/Write
MWnn40	Input Conversion Enable	Read/Write

* The Input Conversion Enable is used to notify the MLC of any changes to the configuration of the Input channels. After using a MW register to configure the operating mode (i.e. not defined, current, or voltage), write a value of ‘1’ to the Input Conversion Enable MW register.

Reference the table below when configuring each Input Configuration Register (MWnn08-MWnn36):

Input Channel Signal Type	Value
Not Defined	0
Current (4-20mA)	7
Voltage (0-10V)	19

The conversion data table below provides a sampling of various values that may be read from an input XW channel and corresponding scalar value:

Module Register Value	Read Voltage Input (V)	Read Current Input (mA)
0	0	4
16384	2.5	8
32768	5	12
49152	7.5	16
65535	10	20

Wiring:

Analog Inputs (voltage)	Analog Inputs (current)
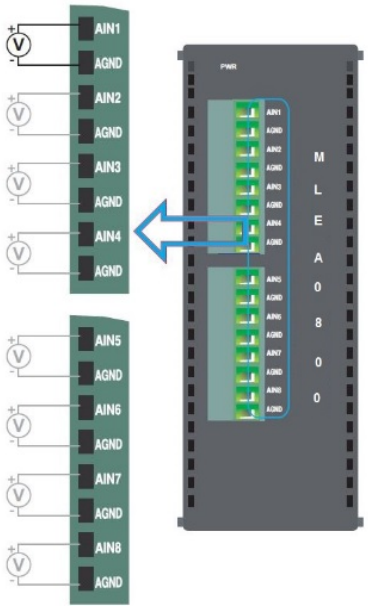	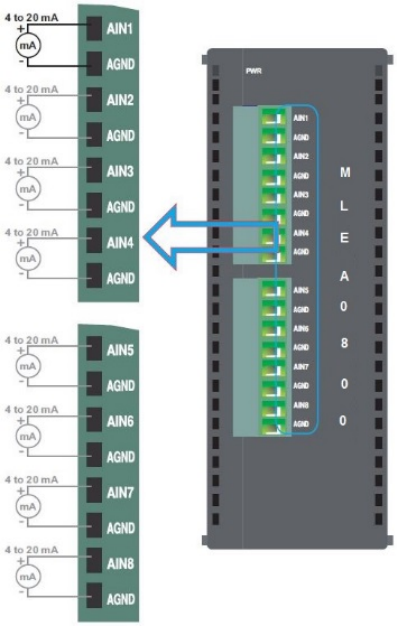

MLE-A0004 (4 Analog Output Module)

This module is an analog output module for the expandable EX-Series PLC base units.

It has 4 analog outputs, which can deliver 0-10V, and 4-20mA signals to a load.

Specifications:

Power	3.75 VDC from MLC PLC base, up to 80mA
Approvals	CE, UL
Analog Outputs	4 Outputs (0-10V, 4 to 20mA)
Resolution	16 bit
Connection method	Removable terminals (3.81 mm pitch)
Accuracy	At 25°C: 0.2% of full scale
Non-linearity	0.04% max.
Voltage Mode	
Output Range	0 to 10VDC
Load Requirements	1000Ω minimum
Voltage Output	For 0-10V: 0.153mV Value / Voltage (V) 0 / 0 16384 / 2.5 32768 / 5 49152 / 7.5 65535 / 10
Current Mode	
Output Range	4-20mA
Load Requirements	500Ω maximum

<table>
<tr><td>Data Output</td><td>For 4-20mA: .2441µA<table><tr><td>Value</td><td>Current (mA)</td></tr><tr><td>0</td><td>4</td></tr><tr><td>16384</td><td>8</td></tr><tr><td>32768</td><td>12</td></tr><tr><td>49152</td><td>16</td></tr><tr><td>65535</td><td>20</td></tr></table></td></tr>
<tr><td colspan="2">General</td></tr>
<tr><td>Operating Temperature</td><td>0 to 55°C</td></tr>
<tr><td>Storage Temperature</td><td>-20 to 85°C</td></tr>
<tr><td>Operating Humidity</td><td>10% to 90% (non-condensing)</td></tr>
<tr><td>Mechanical Dimension (LxWxH)</td><td>3.94x1.38x2.76 inches [100x35x70mm]</td></tr>
<tr><td colspan="2">Input Power Supply</td></tr>
<tr><td>Input Voltage</td><td>24VDC</td></tr>
<tr><td>Input Current</td><td>150mA maximum</td></tr>
</table>

Configuration:

Use MAPware-7000 to assign output (YW) and configuration (MW) memory addresses to the module. These addresses are created according to the slot location of the module, where **nn** refers to the slot number (ex. 01…16):

Register	Description	Access
YWnn00-03	Output Channel 1-4 Data	Read/Write
MWnn04	Output Channel 1 Configuration Register	Read/Write
MWnn08	Output Channel 2 Configuration Register	Read/Write
MWnn12	Output Channel 3 Configuration Register	Read/Write
MWnn16	Output Channel 4 Configuration Register	Read/Write
MWnn20	Output Conversion Enable*	Read/Write

* The Output Conversion Enable is used to notify the MLC of any changes to the configuration of the Output channels. After using a MW register to configure the operating mode (i.e. not defined, current, or voltage), write a value of ‘1’ to the Output Conversion Enable MW register.

Reference the table below when configuring each Output Configuration Register (MWnn04-16):

Output Channel Signal Type	Value
Not Defined	0
Current (4-20mA)	1
Voltage (0-10V)	2

The conversion data table below provides a sampling of various values that may be entered into the YW output channel and corresponding expected analog value:

Module Register Value	Expected Voltage Output (V)	Expected Current Output (mA)
0	0	4
16384	2.5	8
32768	5	12
49152	7.5	16
65535	10	20

Wiring:

Analog Outputs (voltage)	Analog Outputs (current)
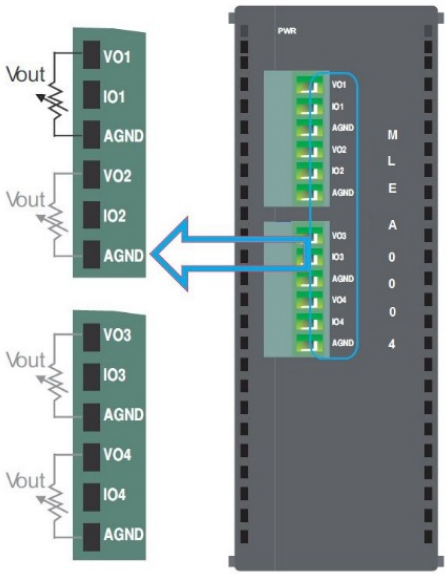	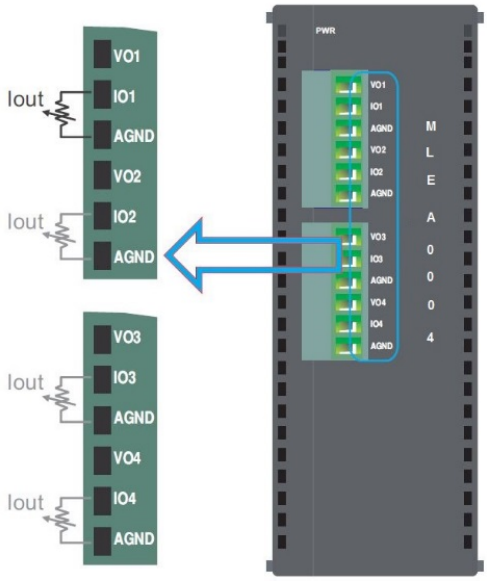

MLE-A0402T (4 Analog Input, 2 Analog Output Module)

This module is an analog input/output module for the expandable EX-Series PLC base units.

It has 4 analog inputs, which can measure:

- 0-100 mV, 0-50mV, 0-10V, or 1-5V
- 0-20mA, or 4-20mA
- RTD PT-100 (Alpha1 or Alpha2)
- Thermocouple (Types B, E, J, K, N, R, S, or T)

And 2 analog outputs, which can deliver:

- 0-10V
- 4-20mA

Specifications:

<table>
<tr><td>Power</td><td>3.75 VDC from MLC PLC base, up to 80mA</td></tr>
<tr><td>Approvals</td><td>CE, UL</td></tr>
<tr><td>Analog Inputs</td><td>4 Universal Inputs:
Voltage mode (0-10V, 1-5V, 0-100mV, 0-50mV)
Current mode (0-20mA, 4-20mA)
RTD PT100 (alpha1, alpha2)
Thermocouple (Type B, R, S, E, J, K, N, T)</td></tr>
<tr><td>Resolution</td><td>16 bit</td></tr>
<tr><td>Connection method</td><td>Removable terminals (3.81 mm pitch)</td></tr>
<tr><td>Accuracy</td><td>At 25°C: 0.2% of full scale; 0.5% for Thermocouple mode</td></tr>
<tr><td>Non-linearity</td><td>0.04% max.</td></tr>
<tr><td>Temperature Drift</td><td>60 ppm</td></tr>
<tr><td colspan="2">Voltage Mode</td></tr>
<tr><td>Input Range</td><td>0 to 10V, 1-5V, 0-100mV, 0-50mV</td></tr>
<tr><td>Data Output</td><td>
<table>
<tr><td>0-10V</td><td>1-5V</td><td>0-100mV</td><td>0-50mV</td><td>Value</td></tr>
<tr><td>0</td><td>1</td><td>0</td><td>0</td><td>0</td></tr>
<tr><td>2.5</td><td>2</td><td>25</td><td>12.5</td><td>16384</td></tr>
<tr><td>5</td><td>3</td><td>50</td><td>25</td><td>32768</td></tr>
<tr><td>7.5</td><td>4</td><td>75</td><td>37.5</td><td>49152</td></tr>
<tr><td>10</td><td>5</td><td>100</td><td>50</td><td>65535</td></tr>
</table>
</td></tr>
<tr><td>Input Impedance</td><td>1MΩ</td></tr>
<tr><td>Conversion cycle time(all channels)</td><td>760 msec. for 0-10V, 1-5V
670 msec. for 0-100mV, 0-50mV</td></tr>
</table>

<table>
<tr><td colspan="2">Current Mode</td></tr>
<tr><td>Input Range</td><td>0-20mA, 4-20mA</td></tr>
<tr><td>Data Output</td><td>
<table>
<tr><td>0-20mA</td><td>4-20mA</td><td>Value</td></tr>
<tr><td>0</td><td>4</td><td>0</td></tr>
<tr><td>5</td><td>8</td><td>16384</td></tr>
<tr><td>10</td><td>12</td><td>32768</td></tr>
<tr><td>15</td><td>16</td><td>49152</td></tr>
<tr><td>20</td><td>20</td><td>65535</td></tr>
</table>
</td></tr>
<tr><td>Input Impedance</td><td>100Ω</td></tr>
<tr><td>Conversion cycle time (all channels)</td><td>670 msec.</td></tr>
<tr><td colspan="2">RTD PT100 Mode</td></tr>
<tr><td>Input Range</td><td>alpha1, alpha2</td></tr>
<tr><td>Input Impedance</td><td>1MΩ</td></tr>
<tr><td>Conversion cycle time (all channels)</td><td>910 msec.</td></tr>
<tr><td>Excitation Current</td><td>0.5mA</td></tr>
<tr><td>Data Output</td><td>
<table>
<tr><td>Mode</td><td>Temperature Range</td><td>Conversion rate</td><td>Example</td></tr>
<tr><td>Alpha1</td><td>-200 to 850°C</td><td>0.02°C/bit</td><td>-200°C = 0
+525°C = 32768
+850°C = 65535</td></tr>
<tr><td>Alpha2</td><td>-100 to 457°C</td><td>0.01°C/bit</td><td>-100°C = 0
+179°C = 32768
+457°C = 65535</td></tr>
</table>
</td></tr>
<tr><td colspan="2">Thermocouple Mode</td></tr>
<tr><td>Input Range</td><td>Types J, K, E, R, S, B, N, and T</td></tr>
<tr><td>Input Impedance</td><td>1MΩ</td></tr>
<tr><td>Conversion cycle time (all channels)</td><td>1230 msec.</td></tr>
<tr><td>Data Output</td><td>
<table>
<tr><td>Mode</td><td>Temperature Range</td><td>Conversion rate</td></tr>
<tr><td>J</td><td>-210 to 1200°C</td><td>0.035°C/bit</td></tr>
<tr><td>K</td><td>-200 to 1373°C</td><td>0.049°C/bit</td></tr>
<tr><td>E</td><td>-200 to 1000°C</td><td>0.027°C/bit</td></tr>
<tr><td>R</td><td>-50 to 1769°C</td><td>0.16°C/bit</td></tr>
<tr><td>S</td><td>-50 to 1769°C</td><td>0.18°C/bit</td></tr>
<tr><td>B</td><td>0 to 1820°C</td><td>0.25°C/bit</td></tr>
<tr><td>N</td><td>-200 to 1300°C</td><td>0.056°C/bit</td></tr>
<tr><td>T</td><td>-200 to 400°C</td><td>0.043°C/bit</td></tr>
</table>
</td></tr>
</table>

<table>
<tr><td>Analog Outputs</td><td>4 Outputs (0-10V, 4 to 20mA)</td></tr>
<tr><td colspan="2">Voltage Mode</td></tr>
<tr><td>Output Range</td><td>0 to 10VDC</td></tr>
<tr><td>Load Requirements</td><td>1000Ω minimum</td></tr>
<tr><td>Voltage Output</td><td>For 0-10V: 0.153mV
<table>
<tr><td>Value</td><td>Voltage (V)</td></tr>
<tr><td>0</td><td>0</td></tr>
<tr><td>16384</td><td>2.5</td></tr>
<tr><td>32768</td><td>5</td></tr>
<tr><td>49152</td><td>7.5</td></tr>
<tr><td>65535</td><td>10</td></tr>
</table></td></tr>
<tr><td colspan="2">Current Mode</td></tr>
<tr><td>Output Range</td><td>4-20mA</td></tr>
<tr><td>Load Requirements</td><td>500Ω maximum</td></tr>
<tr><td>Data Output</td><td>For 4-20mA: .2441µA
<table>
<tr><td>Value</td><td>Current (mA)</td></tr>
<tr><td>0</td><td>4</td></tr>
<tr><td>16384</td><td>8</td></tr>
<tr><td>32768</td><td>12</td></tr>
<tr><td>49152</td><td>16</td></tr>
<tr><td>65535</td><td>20</td></tr>
</table></td></tr>
<tr><td colspan="2">General</td></tr>
<tr><td>Operating Temperature</td><td>0 to 55°C</td></tr>
<tr><td>Storage Temperature</td><td>10% to 90% (non-condensing)</td></tr>
<tr><td>Operating Humidity</td><td>3.94x1.38x2.76 inches [100x35x70mm]</td></tr>
<tr><td>Mechanical Dimension (LxWxH)</td><td></td></tr>
<tr><td colspan="2">Input Power Supply</td></tr>
<tr><td>Input Voltage</td><td>24VDC</td></tr>
<tr><td>Input Current</td><td>150mA maximum</td></tr>
</table>

Configuration:

Use MAPware-7000 to assign input (XW), output (YW) and configuration (MW) memory addresses to the module. These addresses are created according to the slot location of the module, where **nn** refers to the slot number (ex. 01…16):

Register	Description	Access
XWnn00-03	Input Channel 1-4 Data	Read Only
YWnn00-01	Output Channel 1-2 Data	Read/Write
MWnn06	Input Channel 1 Configuration Register	Read/Write
MWnn10	Input Channel 2 Configuration Register	Read/Write
MWnn14	Input Channel 3 Configuration Register	Read/Write
MWnn18	Input Channel 4 Configuration Register	Read/Write
MWnn22	Output Channel 1 Configuration Register	Read/Write
MWnn26	Output Channel 2 Configuration Register	Read/Write
MWnn30	Input and Output Conversion Enable*	Read/Write

* The Output Conversion Enable is used to notify the MLC of any changes to the configuration of the Input/Output channels. After using a MW register to configure the operating mode (i.e. not defined, current, voltage, etc.), write a value of '1' to the Output Conversion Enable MW register.

Reference the tables below when configuring each Input Configuration Register (MWnn06-18) or Output Configuration Register (MWnn22 or MWnn26):

Input Channel Signal Type	Value
Not Defined	0
0-100mV	1
0-50mV	3
0-20mA	5
4-20mA	7
0-10V	19
1-5V	20
RTD PT100 (alpha1)	9
RTD PT100 (alpha2)	10
Thermocouple- Type B	11
Thermocouple- Type R	12
Thermocouple- Type S	13
Thermocouple- Type E	14
Thermocouple- Type J	15
Thermocouple- Type K	16
Thermocouple- Type N	17
Thermocouple- Type T	18

Output Channel Signal Type	Value
Not Defined	0
Current (4-20mA)	1
Voltage (0-10V)	2

The values in the appropriate analog input and output registers range from 0-65535:

Reg Value	Input Values					
	0 to 20mA	4 to 20mA	0 to 10V	1 to 5V	0-100mV	0-50mV
0	0mA	4mA	0V	1V	0	0
16384	5mA	8mA	2.5V	2V	25	12.5
32768	10mA	12mA	5V	3V	50	25
49152	15mA	16mA	7.5V	4V	75	37.5
65535	20mA	20mA	10V	5V	100	50

Reg Value	Output Values	
	0 to 10V	4 to 20mA
0	0	4mA
1024	2.5V	8mA
2048	5V	12mA
3072	7.5V	16mA
4095	10V	20mA

For RTD/Thermocouple

Digital Count Value = 10 * Temperature (in C)

The digital count value is in signed integer format. For example, if the temperature is 57.6 degrees C, the digital count in the XW register will be 578.

Wiring:

Analog Inputs (voltage)	Analog Inputs (current)
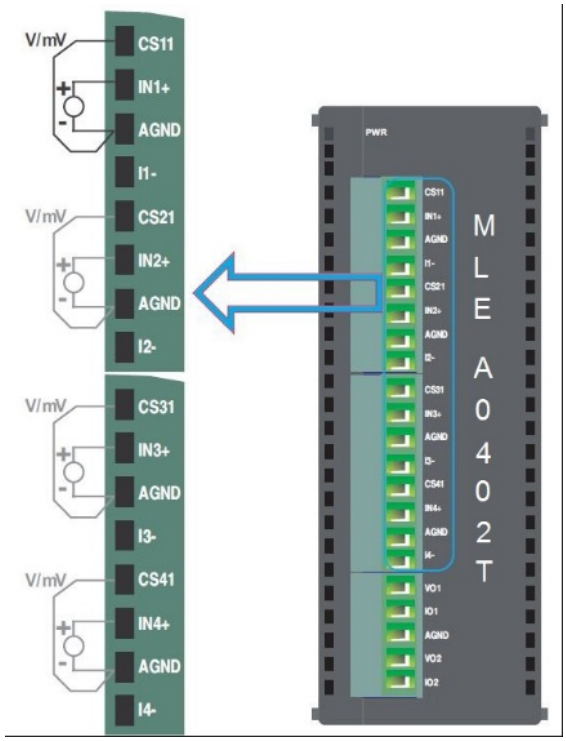	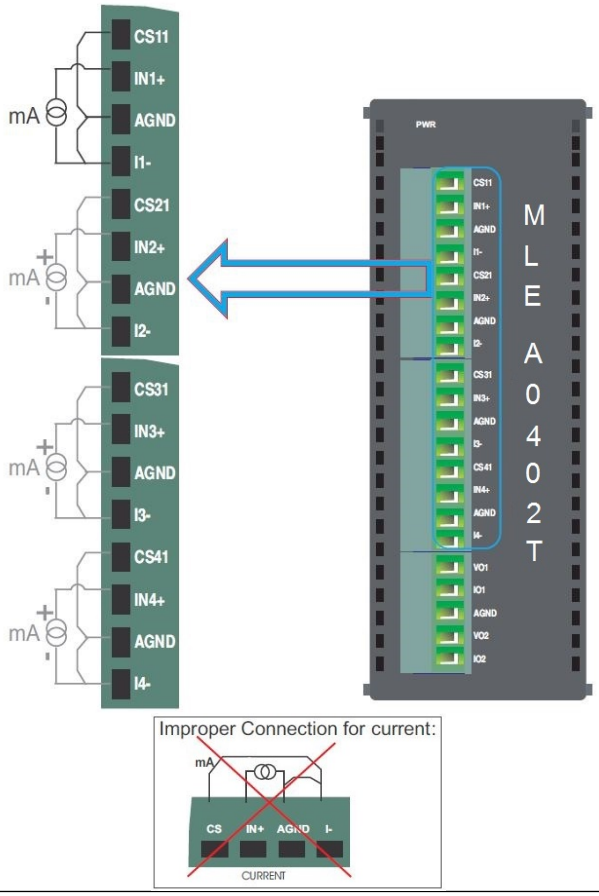

Analog Inputs (RTD)	Analog Inputs (Thermocouple)
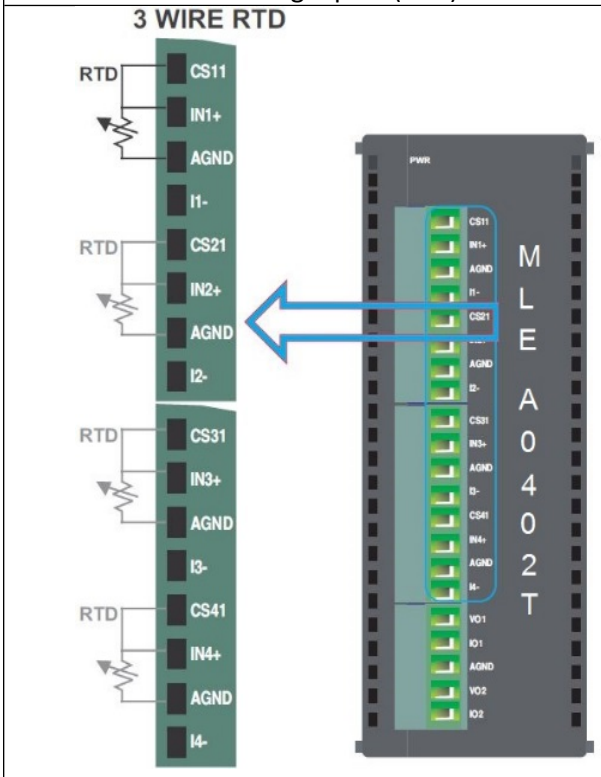	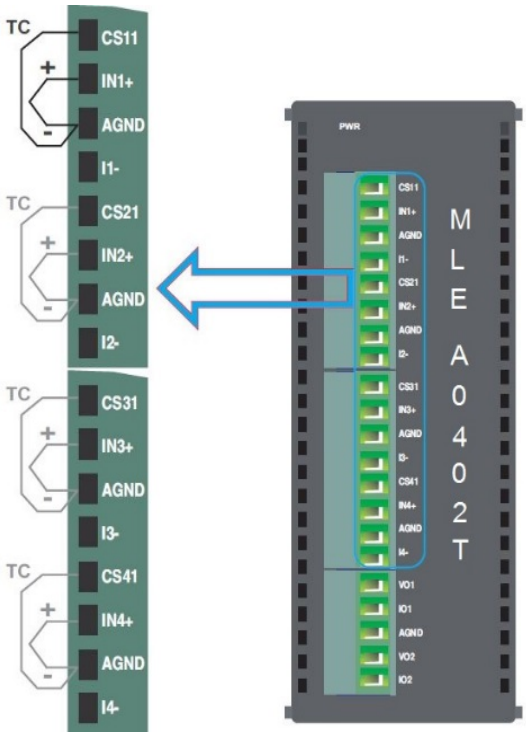
Analog Outputs (voltage)	**Analog Outputs (current)**
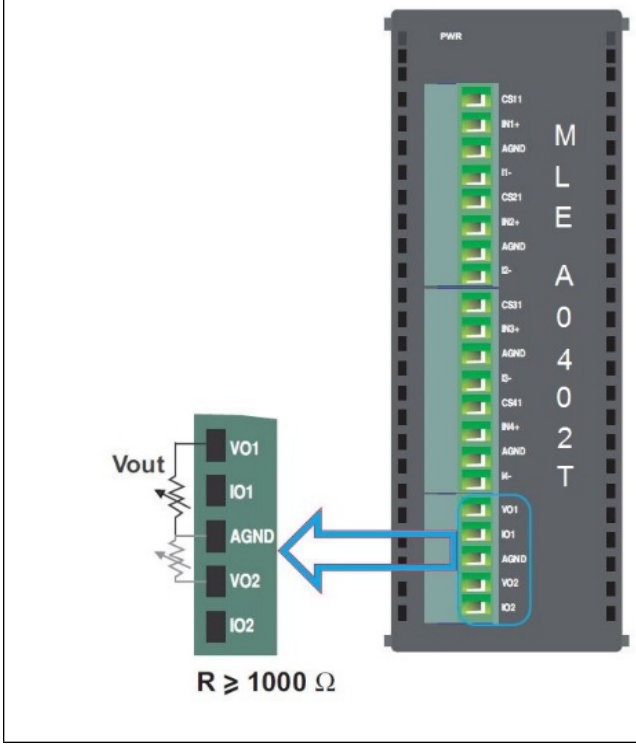	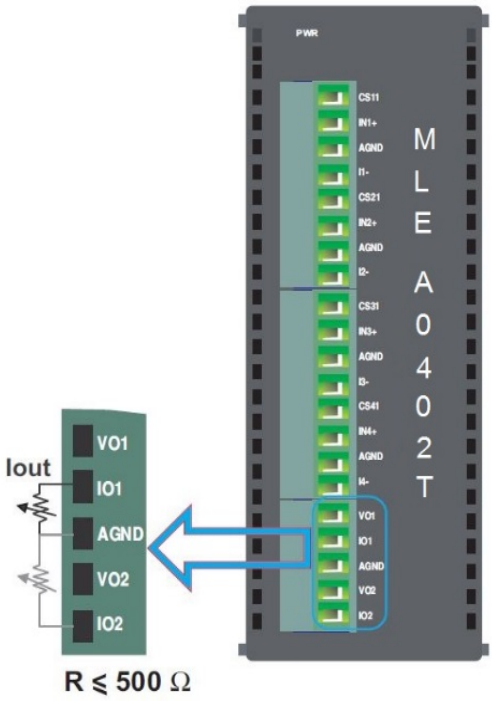

Your Industrial Control Solutions Source

www.maplesystems.com

1010-1055 Rev. 04

Maple Systems, Inc. | 808 134th St. SW, Suite 120, Everett, WA 98204 | 425.745.3229